PORTSMOUTH WATER LTD

SELF LAY WATER MAINS AND SERVICE

PROCEDURE GUIDE

DOCUMENTATION CONTROL

Document Title		Self Lay Water Mains and Service Procedure Guide	
Document Name		Self Lay Water Mains and Service Procedure Guide V6.doc	
Document Path		N:\DWSP\Distribution\Self Lay Water Mains and Procedures Guide\Self Lay Water Mains and Service Procedure Guide V7.doc	
Document Author		**Designation**	**Date**
Name	R.M. Keates	Distribution Engineer	July 2009
Document Owner		**Designation**	**Date**
Name	R.M. Keates	Distribution Engineer	July 2009
Document Approval		**Designation**	**Date**
Name	A. R. Neve	Technical Director	July 2009

DOCUMENT CHANGE

Version	**Date of Issue**	**Description of Changes**
03	Aug 06	Original
04	06 November 2006	Revised Section 6 Formatted to DWSP document template. Insertion of Document Control.
05	11 April 2007	Revision to page 5 - Change of name and email address of Distribution Engineer.
06	27 July 2009	Document update to include OFWAT guidance documents "Competition in providing new water mains and service pipes v3.0", "Guidance on financial arrangements for self lay and requisitioning agreements v2.0" and WRc CoP for "Self laying of water mains and Services 2nd edition."
07	03 April 2012	Update to design and construction charges.

CONTENTS

SECTION 1 KEY PRINCIPLES OF SELF LAY 1

SECTION 2 CONTACT DETAILS 4

SECTION 3 SCOPE OF SELF LAY 6

SECTION 4 PROCEDURE FOR SELF LAY OF MAINS AND SERVICES 8

SECTION 5 APPLICATION FORM 11

SECTION 6 FRAMEWORK AGREEMENT 14

SECTION 7 SITE SPECIFIC AGREEMENT 34

SECTION 8 GUIDANCE ON CHARGING ARRANGEMENTS 38

SECTION 9 SERVICE STANDARDS AND CHARGES SCHEDULE 44

SECTION 10 WORK AND MATERIAL SPECIFICATION FOR SELF LAY OF WATER MAINS AND SERVICES 48

APPENDIX A - CONTRACT DRAWINGS 76

SECTION 1 KEY PRINCIPLES OF SELF LAY

1. KEY PRINCIPLES OF SELF LAY

1. When a new water main is needed the owner or occupier of the premises needing the new supply can ask the water company to install the pipework. When a new water supply is required for domestic purposes, this is known as 'requisitioning'.

   Under the Water Industry Act 1991 (the Act) there are two mechanisms for paying for requisitions. Requisitioners can make yearly payments to water companies for up to twelve years, 'the relevant deficit option'. Alternatively, the Requisitioner can pay a statutory commuted sum, 'the discounted aggregate deficit' (DAD).

   Alternatively the owner or occupier of the premises may choose their own contractor to carry out the work. This is known as 'self lay'.

2. Portsmouth Water will, subject to conditions, allow the self lay of new water mains and services both on and off-site subject to the work being completed by a competent Self Lay Organisation (SLO) to comparable standards to mains and services laid by Portsmouth Water and meeting the Standards and Specifications within the self lay documentation.

   Portsmouth Water will only enter into a formal agreement with the Developer. This allows the Developer free to appoint a competent self lay organisation of their own choice. It is the Developer's responsibility to select the SLO. From 1st January 2006 SLOs should be registered with the Water Industry Registration Scheme (WIRS), which will demonstrate competency in Self Lay.

   Where the SLO is not registered with the Water Industry Registration Scheme Portsmouth Water will assess the competence of the organisation and individual team members for the activities proposed and shall provide written confirmation of acceptance before any works commence.

3. Depending upon the size of the proposed development it may be necessary to undertake an assessment to establish whether off-site reinforcement is required. The assessment and design of any reinforcement required to supply the development will be completed by Portsmouth Water.

   Portsmouth Water will allow SLOs to construct off-site reinforcements subject to the works not affecting existing customers and meeting our Standards and Specifications.

4. Portsmouth water will allow the SLOs to design on-site systems but will approve the designs prior to permitting construction to commence.

5. Portsmouth Water will allow SLOs to install and connect service pipes and meters to the on-site mains subject to meeting our Standards and Specifications.

   Portsmouth Water will allow SLOs to install and connect service pipes and meters to existing pipework subject to the works not affecting existing customers and meeting our Standards and Specifications. Portsmouth Water will approve all connections to existing pipework prior to permitting works to commence.

6. Permanent mains connections between the self laid mains and our existing network will be undertaken by Portsmouth Water.

   Portsmouth Water will allow SLOs to make controlled piece through on site mains connections, which is to connect new mains to existing on-site mains, subject to to the works not affecting existing customers and meeting our Standards and Specifications. Portsmouth Water will approve all connections to existing pipework prior to permitting works to commence.

7. SLOs will be responsible for swabbing, pressure testing and disinfecting the self laid mains all in accordance with the Standards and Specifications.

8. Portsmouth Water will undertake water sampling and testing prior to connecting the self laid main to the existing network.

9. Portsmouth Water assumes the SLOs will procure all materials required to construct the designed mains. The materials must comply with the Standards and Specifications as set out. Should the SLO wish to purchase materials from Portsmouth Water they will be charged at the list price plus handling costs.

10. Portsmouth Water will inspect the works to ensure the SLO complies with the Standards and Specifications. At the formal agreement stage Portsmouth Water will confirm the site specific minimum level of inspection required to deliver the project. Should additional inspections be required as a result of the SLOs failure to meet the specification, additional charges will be made.

11. If the Developer arranges for the self lay of mains and services which would normally be requisitioned, Portsmouth Water will pay the Developer upon the successful commissioning of the mains and full compliance with the Standards and Specifications an asset value for the main, calculated in accordance with Ofwat's Guidance on Financial Arrangements for Self Lay and Requisitioning Agreement version 2.

    Failure to achieve the standards and specifications will necessitate the Developer arranging with his appointed SLO to rectify the unacceptable work which Portsmouth Water will periodically notify the Developer of in writing. Upon successful rectification, Portsmouth Water will pay to the Developer the asset value of the main.

    Any dispute about the financial conditions to Self Lay water mains including the level of security and charges for the work may be referred to Ofwat for final determination.

12. The Developer will be responsible for maintaining all aspects of the self laid mains for a period of 24 months, and shall include the current permanent reinstatement defect liability periods as specified by the Highway Authority and any extended life spans resulting from any failures notified by the Highway Authority.

13. If the SLO self lays in the public highway, full responsibility for obtaining the necessary street authority's approval, compliance with noticing, overrun payments and compliance with the current Specification for Reinstatement of Openings in the Highways rests with the Developer and his SLO.

SECTION 2 CONTACT DETAILS

2. CONTACT DETAILS

FOR THE SCOPE OF SELF LAY:

Richards Keates

Distribution Engineer,
Portsmouth Water Ltd.,
PO Box 8,
West Street,
Havant,
Hants.
PO9 1LG

Tel. No. 023 9249 9888
Fax No. 023 9245 3632
e-mail r.keates@portsmouthwater.co.uk

FOR GENERAL ENQUIRIES, NETWORK APPRAISAL, OFF-SITE REINFORCEMENT ON-SITE MAINS AND SERVICE CONNECTIONS:

Ian Davies

Contracts Engineer,
Portsmouth Water Ltd.,
PO Box 8,
West Street,
Havant,
Hants.
PO9 1LG

Tel. No. 023 9249 9888
Fax No. 023 9245 3632
e-mail i.davies@portsmouthwater.co.uk

SECTION 3 SCOPE OF SELF LAY

3. SCOPE OF SELF LAY

Portsmouth Water permits the self lay of new water mains and services and will enter into discussions with the Developer to agree the most appropriate arrangements for providing the required mains and services for his site.

Portsmouth Water has specific statutory duties and consequently retains responsibility for specific activities as indicated in the table below. Certain activities may be completed by either Portsmouth Water or the Developer. Where options have been indicated, further discussion is encouraged to establish the most appropriate solution.

Self Lay Project Responsibilities

Project Component	Responsibility
DESIGN	
Network impact assessment of proposed development	PW
Off-site mains and reinforcement of supply and distribution systems	PW
Assessment of financial contribution for existing off-site reinforcements	PW
Site layout	PW/SLO
Diversionary requirements of existing utilities	PW/SLO
Liaison with Fire Brigade to estimate fire fighting capabilities	PW/SLO
Requisitioning of fire fighting capacity over and above domestic supplies	SLO
Easement negotiation	PW/SLO
Liaison with statutory organisations	PW/SLO
CONSTRUCTION	
Supervision of SLO to achieve compliance with specification	PW
Materials procurement	PW/SLO
Materials movement and storage	SLO
Off-site mains and reinforcement (subject to whether existing customers affected)	PW/SLO
Site programming and liaison	SLO
Excavation, pipelaying, backfill and surface restoration	SLO
Progress Meetings	PW/SLO
Permanent reinstatement completion, maintenance, including all liabilities and requirements under New Roads and Street Works Act	SLO
Compliance with statutory requirements for construction activities	SLO
Maintenance of fire hydrants and adoption by Fire Brigade	SLO
Excavation for final mains connections	SLO
Backfilling and permanent reinstatement of works associated with final connection	PW
Installation of final connection pipework (subject to whether existing customers affected)	PW/SLO
Swabbing, flushing, pressure testing and chlorination of mains	SLO
Water quality sampling and testing	PW
Installation of communication pipe and mains tapping	SLO
Mains 'cut outs' for service and distribution connections (subject to whether existing customers affected)	PW
Installation of wall mounted meter box	SLO
Installation of private supply pipe	SLO
Installation of meter	PW/SLO
Water Regulations inspections	PW
Preparation of customer billing records and connection details	PW/SLO
Liaison with customer until adoption by Portsmouth Water	SLO
Preparation of record drawings	SLO
Post and plating	SLO
Final adoption, inspection and rectification of faults	PW/SLO
Maintenance period as Contract Specification and statutory requirements	SLO

SECTION 4 PROCEDURE FOR SELF LAY OF MAINS AND SERVICES

4. PROCEDURE FOR SELF LAY OF MAINS AND SERVICES

1. The Developer requiring the mains and services makes enquiries regarding the possibility of self lay. Portsmouth Water provides free of charge a copy of the Self Lay Water Mains and Service Procedure Guide.

2. The Developer applies, using the Application to Self Lay Water Mains and Services form, (a specimen copy is included in section 5) and pays the Initial Enquiry Fee as set out in section 8.

3. Portsmouth Water completes an Initial Reply indicating whether it is able to supply water and whether any exceptional off-site reinforcements are required.

4. The Developer decides the site is feasible and wishes to progress to a Terms Offer and pays the Terms Offer Fee as set out in section 8.

5. Portsmouth Water and the Developer meet to confirm the terms which apply for self lay and agree the extent of self lay. The Developer and Portsmouth Water enter into a formal agreement.

   The agreement specifies that the mains and or services are to be laid under Portsmouth Water's powers and replaces the right to require Portsmouth Water to provide the mains and services. A specimen copy of the Framework Agreement is in section 6.

6. Portsmouth Water complete a technical appraisal of the network to determine the exact location where the development may be connected and the extent of off-site reinforcement required to supply the development.

   Generally Portsmouth Water prefer to design the on-site layout and liaise with statutory organisations regarding design, however it will check designs submitted by the Developer and charge accordingly when requested.

7. The Developer or Requisitioner may pay Portsmouth Water for the mains in accordance with the Water Industry Act 1991 which provides two alternatives, either making yearly payments to water companies for up to twelve years, known as the relevant deficit option, or the Requisitioner can pay a statutory commuted sum, the discounted aggregate deficit (DAD).

   Alternatively the Developer may choose their own SLO and self lay the water main.

8. The Developer accepts the terms and makes appropriate payment in accordance with the terms and completes the Site Agreement document. A specimen is included in section 7.

9. The Developer arranges a meeting to confirm construction arrangements. Attendees at the meeting will be the SLO and the Portsmouth Water Supervisor. At this meeting the Developer will provide, for the labour he intends to use, evidence of their:

   - NVQ certificates (or equivalent)
   - New Roads and Street Works Act certification
   - Blue cards or equivalent

   Arrangements for the site start date and construction practices will be agreed at the site meeting.

   Work must not commence before the meeting has been completed.

10. On-site liaison continues throughout the construction stages. Any non-conformance with the specification will result in the formal notification of unsatisfactory work and the work having to be stopped, all in accordance with the Formal Agreement.

11. Once the agreed work has been satisfactorily completed, the SLO will arrange for:

    - the main to be filled
    - the main to be pressure tested, swabbed and flushed, and the test supervised by Portsmouth Water
    - the main to be bacteriologically sampled by Portsmouth Water.

12. Once the new main has been passed bacteriologically it will be connected by Portsmouth Water to the live mains network. At this stage all work involving contact with the water in the main must be done by Portsmouth Water.

13. Once the main is in use and any remedial works have been completed in accordance with the Formal Agreement, Portsmouth Water will pay to the applicant 85% of the asset value. After this date the applicant will continue to be liable for any defects to the main for a period of a further 24 months. A retention fee of 15% will be made, repayable on completion of the defect period.

14. If the SLO is also self connecting services he must submit a drawing indicating the position of ducts, services, stopcocks or wall mounted boxes for approval, all in accordance with the current Water Supply (Water Fittings) Regulations and the Standards and Specification set out in the Self Lay Mains & Service Guide.

    Once design approval is given the Developer must pay Portsmouth Water the appropriate infrastructure charges and service pipe supervision fee as set out in the Scheme of Charges.

    Construction of services may not commence without prior agreement. Failure to comply will mean that the right to connect subsequent services will be refused. Each service will be inspected by Portsmouth Water to confirm compliance with the specification, site agreements and the current Water Supply (Water Fittings) Regulations.

    The Developer must complete and return the service connection new occupier forms providing details of the new occupiers and postal address of the property.

15. If the SLO require Portsmouth Water to complete the service connections, an application for a Developer's Pack must be made which sets out in detail the procedure and associated costs.

SECTION 5 APPLICATION FORM

PORTSMOUTH WATER Ltd

APPLICATION TO SELF LAY WATER MAINS AND/OR SERVICES

Portsmouth Water Ltd operates self lay schemes which allow Developers to arrange for competent approved installers to lay mains, and/or services, on development sites. The application form needs to be completed and sent to the address given below for each site where a Developer wishes to have the work self laid.

The application should be accompanied by a layout plan of the development which must show:

- Number and type of properties
- Areas to be adopted as public highways
- Location of service strips
- **All phases** of the development

Site Name _____

Developer _____

Developer Contact Name/Position _____

Contact Telephone No. _____

Address _____

_____

_____

_____

I hereby ask permission for the self lay contractor named below to be allowed to lay the new water mains/services (delete as appropriate) on the above development.

Contractor Name _____

Contact Name _____

Contact Telephone No. _____

Address _____

_____

_____

_____

In making this application I am aware that:

- The terms and conditions of Portsmouth Water Ltd's Self Lay Scheme will apply.
- The Developer and Contractor must comply with the terms and conditions of the Self Lay Scheme.
- This application is instead of requisitioning mains on this development.
- The mains/services cannot be connected until the work is accepted by Portsmouth Water Ltd.
- Where services are to be laid, the Developer will be responsible for all payments due when the connection is made. This will include an administration fee together with the infrastructure and water for construction charges.
- All work must comply with Portsmouth Water current procedures and specification for Self Lay of Water Mains and Services.

Occupancy Profile

Date first property will be occupied _____

Date last property will be occupied _____

If occupancy rate is not expected to be uniform, please contact our office to discuss.

Type of property and number of units to be built.

Detached Houses	2 bed	_____	3 bed	_____	4 (or more) bed	_____
Semi-Detached Houses	2 bed	_____	3 bed	_____	4 (or more) bed	_____
Terraced Houses	_____					
Bungalows	_____					
Flats	_____					
Other	_____					

Previous Use of Site

Please tick below what the site was previously used for:

Agriculture _____

Housing _____

Industry _____

Landfill _____

Other, please state _____

If the site has been used for industry/landfill

Is a soil report available? YES/NO

Land Ownership

Is the site owned by the Developer? YES/NO

If NO, date expected to be purchased

Has full planning permission be granted? YES/NO

If NO, current status of Planning Application

Signed _____

On behalf of _____

Name _____

Date _____

Reply to: Portsmouth Water Ltd., PO Box 8, West Street, Havant, Hants. PO9 1LG

SECTION 6 FRAMEWORK AGREEMENT

DATED

Name of the Undertaker

- and -

Name of the Developer

- and –

Name of SLO

- and –

Name of the Owner (if any)

and

Name of the Surety (if any)

and

Name of the Adjoining Owner (if any)

A G R E E M E N T

relating to

Self Laying of Water Mains and Service Pipes

THIS AGREEMENT is made the day of 200

BETWEEN

(1) **……** whose registered office is at …… (Company registration no……) (**"the Undertaker"**), being the Undertaker in whom the Self Lay Works will be vested;

(2) **……** whose registered office is at **……..……...** (Company registration no……) (**"the Developer"**)**,** being the party intending to carry out the Development;

(3) **……** whose registered office is at ……..… (Company registration no……) (**"the SLO"**)**,** being the party undertaking the Self Lay Works on behalf of the Developer;

(4) **……** whose registered office is at …… (Company registration no……) (**"the Owner"**), being the owner of the Site (if not the Developer);

(5) **……** whose registered office is at …… (Company registration no……) (**"the Adjoining Owner"**), being the owner of land adjoining the Site, in which Self Lay Works are also to be undertaken,;

(6) **……** whose registered office is at ……..…..…… (Company registration no……) (**"the Surety"**), being the party providing security for the Self Lay Works and the payments to be paid to the Undertaker.

(NOTE: IF A PARTY IS NOT APPLICABLE DO NOT DELETE BUT INSERT "NONE")

IT IS AGREED as follows:-

1 Interpretation

1.1 The following terms, as defined below, are specific to this Agreement:

Construction Period	* months from the Start Date
Deposit	£* being the security required in respect of the proper construction of the Self Lay Works, including the Service Pipe Deposit
Developer's Payment	the actual costs incurred by the Undertaker in providing the Undertaker's Works which at the date of this Agreement is estimated to be £*
Development	the development to be carried out by the Developer on the Site under planning permission reference no…….comprising * premises
Drawing(s)	the Layout Plan and such other drawings and calculations relating to the Self Lay Works numbered: * (NB. not to be annexed to this Agreement)
Estimated Asset Value	£*
Inspection Fee	£* , in respect of the Undertaker's inspection and supervision of the Self Lay Works.
Layout Plan	plan number *, annexed hereto, showing the Site, the Adjoining Land and the layout of the Self Lay Works.
Service Pipe Deposit	£* , being the security required in respect of the proper construction of the Service Pipes.
Site	land at……..shown edged green on the Layout Plan
Undertaker's Works	the items listed in Schedule 2, which must be completed prior to signing.
Water Mains Phasing Programme	the programme, approved as part of the design of the Self Lay Works, which is listed in Schedule 1.

1.2 The following general terms, as defined below, shall also apply throughout this Agreement:

Act	Water Industry Act 1991
Adjoining Land	land adjoining the Site, shown edged brown on the Layout Plan, in the ownership of a person other than the Developer or the Owner where part of the Self Lay Works are to be undertaken.
Asset Value	the "discounted offset amount" calculated in accordance with section 51C of the Act.

Bond Amount	a sum equal to the Deposit.
Charges Scheme	The Charges Scheme made by the Undertaker under section 143 of the Act.
Code of Practice	the Code of Practice for the Self Laying of Water Mains and Service Pipes published by WRC plc.
Connection Charges	the connection charges, as published by the Undertaker, which are applicable at the time when a Service Pipe Connection is made as part of the Self Lay Works and/or in respect of any Service Pipe Connections to be made by the Undertaker.
Costs Schedule	The chargeable items payable by the SLO to the Undertaker in respect of the Self Lay Works as set out in Schedule 3. Notwithstanding the fact that indicative (i.e. current at the date of the Agreement) charges are set out in Schedule 3, the charges shall be payable at the rate prevailing at the date of the Self Lay Works as set out in the Charges' Scheme or as otherwise published by the Undertaker.
Days	working days, excluding Saturdays, Sundays, Bank Holidays and public holidays.
Defects	includes damage to the Self Lay Works.
Defects Liability Period	12 months from the date when the Water Main was satisfactorily commissioned and connected to the public water supply network or in the case of a Service Pipe 12 months from the date of the Service Pipe Connection or compliance with clause 9.2, whichever is the later.
Infrastructure Charge	the Infrastructure Charge payable to the Undertaker under section 146 of the Act in respect of any new connection to the Water Main or any other water main [or public sewer] vested in the Undertaker.
Protected Strip	a strip of land 3 metres measured horizontally on either side from the centreline of the Water Main (or any other water main [or public sewer] vested in the Undertaker) or such other distance or distances as may reasonably be specified by the Undertaker and are shown on the Drawing(s).
Self Lay Works	the construction of the Water Main to serve the Development on the Site together with accessories as defined in the Act and all necessary works of reinstatement to the land or to any Street in which the Self Lay Works are constructed and the laying of the Service Pipes and the Service Pipe Connections to be made by the SLO.
Service Pipe	such part of any service pipe (up to and including 63mm diameter) supplying water to any house or building on the Site (including the meter, meter box, surface box, marker and other apparatus) which is to be vested in the Undertaker, shown as the Communication Pipe on Figure 1 of the Code of Practice.
Service Pipe Connection	The connection of a Service Pipe to the Water Main or to any other water main vested in the Undertaker.

Service Pipes Construction Programme	the programme to be provided under clause 8.1, including any subsequent variation agreed in writing pursuant to clause 9.
SLO	If no party is expressly named in this Agreement as the SLO, the Developer.
Specification	the Code of Practice, current at the time this Agreement is made, together with any Addenda thereto issued by the Undertaker and together with the Drawing(s).
Start Date	the date agreed in writing that the Self Lay Works shall commence pursuant to clause 3.4.
Street Works Legislation	New Roads and Street Works Act 1991, Traffic Management Act 2004 and any other Act governing the carrying out of Street Works in a Street. ("Street", "Street Authority" and "Street Works" shall be defined accordingly.)
Water Main	the water main (including accessories as defined in the Act) to be constructed by the SLO as part of the Self Lay Works along the route shown approximately on the Drawings
Water Industry Registration Scheme	The Registration Scheme operated by Lloyds Register EMEA on behalf of Water UK and its members, which certifies the competence of companies undertaking self lay works.

1.3 This Agreement made in pursuance of Section 51A of the Act sets out the entire agreement and understanding between the parties in relation to the Self Lay Works.

1.4 If no details are shown for any of the parties (other than the Undertaker and Developer who are mandatory) it shall be assumed there is no such party

1.5 This Agreement is personal to the parties save as provided for in clause 15 or:

1.5.1 on the solvent reconstruction or amalgamation of any of the parties; or

1.5.2 on the appointment under the Act of another person as the water undertaker for the area including the Site.

1.6 If more than one person is named as one of the parties then any covenants agreements liabilities or statements made by that party shall be deemed to be made by those persons jointly and severally.

1.7 References to gender shall include either gender or a corporate identity and the singular shall include the plural.

1.8 References to any term set out in clauses 1.1 and 1.2 shall, with the Undertaker's written consent, include any part or parts thereof and any variation thereof agreed in accordance with clause 11.

1.9 References to an Act of Parliament include any statutory modification or re-enactment thereof for the time being in force and all regulations, orders and codes of practice made under that Act

of Parliament and any modification or replacement thereof.

1.10 The Interpretation Act 1978 shall apply for the purposes of interpretation of this Agreement as it applies to the interpretation of an Act of Parliament

1.11 In the event of any conflict or ambiguity, the Code of Practice shall prevail over individual clauses set out below and the Drawing(s) shall prevail over the Code of Practice.

2. Preliminary Requirements

2. Prior to this Agreement being completed or, if later, as soon as reasonably practicable thereafter and in any event before the Self Lay Works are commenced:

2.1 the Self Lay Works shall have been designed either by the SLO or the Developer (such design to have been approved in writing by the Undertaker) or by the Undertaker;

2.2 any phasing of the Self Lay Works (other than the Service Pipes Construction Programme) shall have been agreed between the SLO or the Developer and the Undertaker;

2.3 if no party is expressly named in this Agreement as the SLO or if the party named as the SLO intends to sub-contract any of the Self Lay Works to another person, the Developer or the SLO (as the case may be) shall have notified the Undertaker in writing of all contractors and sub-contractors, each of whom must be accredited either under the Water Industry Registration Scheme or by the Undertaker and must remain duly accredited for the duration of the Self Lay Works and this Agreement, who is or will be appointed to undertake the Self Lay Works Provided That no more than one person acting as SLO may be named as a party to this Agreement, such person shall be the principal contractor or sub-contractor responsible for the management and supervision of the Self Lay Works and such party shall not be entitled under any circumstances to sub-contract any aspect of the management and supervision of the Self Lay Works;

2.4 any charges payable to the Undertaker in respect of the design of the Self Lay Works or the approval of such design shall have been paid by the SLO to the Undertaker;

2.5 the Undertaker shall have notified the SLO in writing of the estimated cost of the Undertaker's Works (Schedule 2) or, if nothing is specified in Schedule 2, that there are no Undertaker's Works; and

2.6 the Undertaker shall have notified the SLO of the Estimated Asset Value.

3. SLO Obligations

3.1 The SLO shall not commence any part of the Self Lay Works until this Agreement has been completed, the Inspection Fee has been paid to the Undertaker by either the SLO or the Developer and the estimated amount of the Developer's Payment as set out in clause 1.1 has been paid to the Undertaker by the Developer. (For the avoidance of doubt if the Self Lay Works are commenced before the Start Date the Undertaker shall not be under any obligation to pay an Asset Value for that part of the Self Lay Works.)

3.2 Before the Self Lay Works commence on site, the SLO **MUST** ensure that a pre-construction site meeting is held with the Undertaker (the SLO having given at least 5 Days notice to the Undertaker) in order to agree the Start Date (which date shall be confirmed in writing by the Undertaker) and the method of construction of the Self Lay Works.

3.3 The SLO shall give the Undertaker at least 15 Days notice in writing of its intention (when the construction of the Self Lay Works has ceased for more than 10 Days) to recommence such construction.

3.4 The SLO shall not make any Service Pipe Connections which the Undertaker has notified the SLO that it will make.

3.5 Where appropriate, the SLO shall pay to the Undertaker the charges (including Infrastructure Charges) due in respect of the Self Lay Works as set out in the Costs Schedule, which notwithstanding the fact that indicative (ie. current at the date of the Agreement) charges are set out in Schedule 3, shall be payable at the rate (as set out in the Charges' Scheme or as otherwise published by the Undertaker) prevailing at the date of the relevant part of the Self Lay Works.

3.6 The SLO shall properly construct and complete the Self Lay Works in accordance with the Specification and this Agreement within the Construction Period and to the satisfaction of the Undertaker.

3.7 The SLO shall arrange for the Undertaker to have access to the Self Lay Works and the Site at all reasonable times and in particular shall, at its own cost, provide all relevant plant, equipment (including safety equipment) signing, guarding, lighting and personnel whilst the Undertaker is inspecting the Self Lay Works on the Site.

3.8 The SLO shall apply to the Undertaker to connect the Water Main to the Undertaker's public water supply system by giving not less than 10 Days written notice before such connection is required.

3.9 In carrying out the Self Lay Works in a highway maintainable or a highway which has been declared to be prospectively maintainable at the public expense, the SLO shall:

3.9.1 obtain a Street Works licence in its own name from the Street Authority for the Street;

3.9.2 comply fully with the Street Works Legislation and make all payments due under the Street Works Legislation; and

3.9.3 in particular, but without prejudice to the generality of the foregoing, comply fully with the requirements of the Street Works Legislation regarding the supervision of the Self Lay Works by a qualified supervisor and the presence on site of a trained operative to the extent that such provisions are for the time being in force.

3.10 In carrying out the Self Lay Works, the SLO shall ensure that all construction operations are carried out in such a way as to avoid danger to the public and minimise disturbance to the general public and to any access to any premises or use of any public highway or private road.

3.11 Subject to clauses 3.12 and 3.13, during the Defects Liability Period the Undertaker may carry out any maintenance of or repair any Defect in the Self Lay Works or, at its discretion, may by written notice require the SLO to remedy any Defect (to a reasonable timescale determined by the Undertaker) or make good the Self Lay Works.

3.12 Insofar as any part of the Self Lay Works involve work in a Street, then notwithstanding any other term of this Agreement the SLO shall continue to be liable to execute any work which forms part of the temporary or permanent reinstatement for the duration of the permanent guarantee period (within the meaning of S1.2.1 of the Specification for the Reinstatement of Openings in Highways approved in June 1992 under the Street Works Legislation)

PROVIDED THAT after any part of the Self Lay Works affected by any such work has become vested in the Undertaker the Undertaker may by giving the SLO not less than 5 Days notice in writing require the SLO to carry out any such work within such time as may be specified and if the SLO fails to carry out any such work within the time specified or if the circumstances constitute an emergency, the Undertaker shall be entitled to carry out such works after giving reasonable notice (taking into account the urgency of the work) to the SLO.

3.13 The SLO shall reimburse the Undertaker for all such proper and reasonable costs as may be incurred by the Undertaker under clauses 3.11 and 3.12.

3.14 In addition to the Inspection Fee, the SLO shall pay to the Undertaker such further sum or sums as may be required upon receipt of an invoice from the Undertaker in the event that further site inspections are required beyond those originally agreed as being part of the Inspection Fee.

3.15 The SLO shall pay any payment payable to the Undertaker under this Agreement within 20 Days of receipt of an invoice.

3.16 The SLO shall not carry out any activities which may affect any of the Undertaker's existing public water mains or the water therein unless such activities shall have been previously agreed in writing by the Undertaker.

4. Further Obligations on the part of the Developer and Owner

4.1 The Developer shall pay to the Undertaker on completion of this Agreement the estimated amount of the Developer's Payment as set out in clause 1.1 and in addition, in the event that there is no Surety as a party to this Agreement, the Deposit, as security in respect of the proper construction of the Self Lay Works and any other payments payable to the Undertaker under the terms of this Agreement.

4.2 Throughout the term of this Agreement, the Developer warrants that it has and will retain sufficient rights in the Site and any Adjoining Land to enable the Self Lay Works to be constructed and to permit their use repair and maintenance prior to the date when the Self Lay Works are vested in the Undertaker.

4.3 Insofar as the Site is in the freehold ownership of a party named as the Owner or there is Adjoining Land, the Developer warrants that it has examined the title of such Owner or the Adjoining Owner, as the case maybe, and that such person has an unencumbered title to such part of the Site or the Adjoining Land, as the case maybe, where the Self Lay Works are to be constructed.

4.4 The Developer and the Owner acknowledge that until the issue of the vesting declaration in respect of the Water Main pursuant to clause 8.2 or the vesting of any Service Pipe pursuant to clause 9.1, the Water Main or Service Pipes, as the case may be, shall belong to the SLO.

4.5 The Developer and the Owner shall not build or place, or permit to be built or placed, any building, structure, erection, plant, machinery or apparatus and shall not plant, or permit to be planted, any tree on, over or within any Protected Strip without the written consent of the Undertaker PROVIDED THAT this condition shall not apply to anything shown on the Drawing(s) or the Layout Plan within a Protected Strip or to the apparatus of any electricity, gas, sewerage or telecommunications undertaker provided that any such electricity, gas, sewerage or telecommunications apparatus does not obstruct future access to any part of the Self Lay Works.

4.6 Before the Water Main is vested in the Undertaker, or later at the discretion of the Undertaker, the Developer shall pay to the Undertaker the balance of the Developer's Payment upon receipt of an invoice from the Undertaker giving a breakdown of the actual costs that have been or will be incurred in respect of the Undertaker's Works in a format similar to that set out in Schedule 2 PROVIDED THAT if the estimated amount of the Developer's Payment paid under clause 3.1 exceeds the actual Developer's Payment then the Undertaker shall pay the difference between such amounts to the Developer when the Asset Value is paid but PROVIDED ALSO THAT if estimated amount of the Developer's Payment paid under clause 3.1 is less than the actual Developer's Payment, either the Developer shall pay the shortfall to the Undertaker within 20 Days of receipt of an invoice from the Undertaker or the Undertaker shall deduct the amount owing to it from the Asset Value.

4.7 Before the Self Lay Works are vested in the Undertaker, the Developer shall at the Undertaker's request execute or secure the execution (at no cost to the Undertaker) of:

4.7.1 a Transfer to the Undertaker (if so required by the Undertaker) vesting in the Undertaker the title absolute free from any covenant, easement, exception or reservation or other encumbrance of the land forming the sites of pumping stations that form part of the Self Lay Works together with all rights necessary to gain access thereto with vehicles and the Transfer deed shall contain the following agreement and declaration:

"It is hereby agreed and declared that this Transfer of the Property shall not vest in [Undertaker's name] any pumping station or accessories thereto on, over or under the Property provided however that the same may vest in [Undertaker's name] as part of any vesting of water mains within the [Site] and until such time the obligations of the Transferor in any Agreement by virtue of Section 51A of the Water Industry Act 1991 shall remain unimpaired and fully enforceable"

4.7.2 a Deed of Grant of Easement (if so required by the Undertaker) in the standard form of the Undertaker (annexed hereto) in relation to the Self Lay Works except in respect of any Service Pipes or any part of the Self Lay Works within a Street.

5. Adjoining Land

5.1 If the SLO is to construct any part of the Self Lay Works in any Adjoining Land then the Adjoining Owner shall be a party to this Agreement for the sole purpose of acknowledging and consenting to the arrangements herein expressed between the SLO, Developer and the Undertaker and agreeing to the covenants set out in this clause. (For the avoidance of doubt the Adjoining Owner shall have no liability under the provisions of this Agreement in relation to the construction and future maintenance or repair of the Self Lay Works.)

5.2 The Adjoining Owner hereby consents and agrees to the arrangements contained within this Agreement as far as they relate to the Adjoining Land and to the adoption of the Self Lay Works into the Undertaker's public water supply system and acknowledges that the Undertaker shall be entitled to carry out its statutory rights under the Act in respect of the Adjoining Land following the vesting of the Self Lay Works.

5.3 The Adjoining Owner acknowledges that the Self Lay Works belong to the SLO until they become vested in the Undertaker and agrees to give the same covenant as set out in clause 4.5 in respect of the Adjoining Land.

6 Inspection of Self Lay Works

6.1 During the progress of the Self Lay Works, the Defects Liability Period and the permanent guarantee period provided for in clause 3.12 of this Agreement, the SLO and the Developer shall give to the Undertaker and any person or persons duly authorised by him access to every part of the Self Lay Works and, insofar as it is practicable to do so and necessary to confirm the quality and specification of materials which are to be used for the Self Lay Works, to all workshops and places where work is being prepared or from which materials and machinery are being obtained for the Self Lay Works and permit them or him to inspect the same and all materials used or intended for use therein and to take samples of materials used or proposed to be used in connection with the Self Lay Works and to carry out tests as he may deem necessary.

6.2 The Undertaker may by notice in writing require the removal or proper re-execution of any work which in respect of materials or workmanship is in its opinion faulty or not in accordance with the Specification or the Street Works Legislation and the SLO shall forthwith comply with any such requirement.

6.3 The SLO shall, if so requested by the Undertaker, open up for inspection any part of the Self Lay Works which may have been covered up and if the SLO fails to comply with any such requirement the Undertaker may itself open up the relevant part of the Self Lay Works PROVIDED THAT:

6.3.1 in the event of any part of the Self Lay Works being found to be defective, the cost of such opening up and of rectification of any defects and the reinstatement (including reasonable administrative costs and incidental expenses) shall be borne by the SLO; or

6.3.2 in the event that no part of the Self Lay Works is found to be defective, the cost of such opening up and reinstatement shall be borne by the Undertaker unless the reason the Undertaker required the Self Lay Works to be opened up was because that part of the Self Lay Works had commenced before the Start Date, notice had not been given in accordance with clause 3.2 or the Undertaker was not previously allowed access in accordance with clause 6.1, in which case the relevant costs (including reasonable administrative costs and incidental expenses) shall be borne by the SLO.

7. Default by the SLO and/or the Developer

7.1 In the event of default (at the sole determination of the Undertaker) of any obligations under this Agreement by the SLO, the Developer (if a separate party to the SLO) shall become jointly and severally liable for the SLO's obligations.

7.2 In the event of default (at the sole determination of the Undertaker) of any obligations under this Agreement by the Developer, the Owner (if a separate party to the Developer) shall become jointly and severally liable for the Developer's (including, under clause 7.1, the SLO's) obligations.

7.3 In the event of a failure by the SLO to carry out and maintain the Self Lay Works or any part thereof in accordance with the provisions of this Agreement or (once having commenced the Self Lay Works) diligently to proceed with the same within the Construction Period or in the event that the SLO shall fail to comply with any obligation of a utility executing Street Works under the Street Works Legislation or in the event of the SLO ceasing to be accredited before the Self Lay Works have been adopted, the Undertaker may take over the construction of and/or remedy, reconstruct, maintain and complete such part or parts of the Self Lay Works as the Undertaker deems appropriate by giving the Developer and the SLO at least 10 Days notice in writing (or such notice (if any) as shall be reasonable in the case of an emergency of which the Undertaker shall be the sole judge) of its intention to do so and recover the costs and

expenses incurred in carrying out any such work (including reasonable administrative costs and incidental expenses) from the SLO (or, in default, the Developer or the Surety or the Deposit) without prejudice to any other rights the Undertaker may have.

7.4 Furthermore, in the event of the Undertaker carrying out and/or maintaining the Self Lay Works pursuant to clause 7.3, the Undertaker shall be entitled to enter upon and temporarily occupy by its servants, contractors, agents or workmen so much of the Site as may be required for the purposes of carrying out such work and for that purpose may expel the SLO and/or any other party from that part of the Site where the Self Lay Works are being undertaken.

7.5 Without prejudice to clause 7.3, in the event of the SLO failing to fulfil any obligation under this Agreement not mentioned in clause 3 or the Developer, Owner or Adjoining Owner failing to fulfil any of their obligations under this Agreement, the Undertaker may give 10 Days notice in writing (or such notice (if any) as shall be reasonable in the case of emergency of which the Undertaker shall be the sole judge) to the SLO and the Developer specifying the default and the date by which such default is to be remedied and if not remedied by such date, the Undertaker may either:

7.5.1 call upon the Surety to pay on demand such amount or amounts (including reasonable administrative costs and incidental expenses) as may from time to time be certified by the Undertaker as necessary to fulfil such of the SLO's, Developer's, Owner's or Adjoining Owner's obligations, as the case may be PROVIDED THAT such liability shall not exceed the Bond Amount; or

7.5.2 use the Deposit to fulfil any such obligations.

7.6 The Surety shall not be released from its liability under this Agreement until either:

7.6.1 the expiration of the Defects Liability Period; or

7.6.2 payment to the Undertaker of the full amount of the Bond Amount, whichever is the earliest;

PROVIDED THAT on the expiration of the Defects Liability Period in respect of the Water Main, the Undertaker shall (without prejudice to the Surety's ongoing liability in respect of Service Pipes (limited to the Service Pipe Deposit) release the Surety from its liability under this Agreement in respect of the Water Main; and

PROVIDED ALSO that the Undertaker may at any time prior to the end of the Defects Liability Period in respect of the Service Pipes at its sole discretion (after receipt of an application from the SLO) release part or all of the Service Pipe Deposit by giving written notice to the Surety, SLO and the Developer.

7.7 For the avoidance of doubt, the Surety shall not be discharged or released from its obligations by any determination or disclaimer of this Agreement or by any arrangement between the SLO and the Undertaker or by any alteration in the SLO's obligations or by the execution of any variation to the Self Lay Works authorised under this Agreement or by any forbearance whether as to payment, performance, time or otherwise whether made with or without the assent of the Surety.

7.8 If the amount demanded from the Surety under clause 7.3 or 7.5.1 exceeds the amount required by the Undertaker to fulfil the SLO's, the Developer's, the Owner's or the Adjoining Owner's obligations, as the case may be under this Agreement, the Undertaker shall repay to the Surety such excess amount at the end of the Defects Liability Period in respect of the Service Pipes.

7.9 Alternatively, if the Developer has paid a Deposit and the Deposit is not required by the Undertaker or exceeds the amount required by the Undertaker to fulfil the SLO's, the Developer's, the Owner's or the Adjoining Owner's obligations, as the case may be, under this Agreement, the Undertaker shall:

7.9.1 at the end of the Defects Liability Period in respect of the Water Main, repay the Deposit or such unused part thereof (less the Service Pipe Deposit) together with interest thereon; and

7.9.2 at the end of the Defects Liability Period in respect of the Service Pipes, release the Service Pipe Deposit or such unused part thereof together with interest thereon;

PROVIDED THAT the Undertaker may at any time prior to the end of the Defects Liability Period in respect of the Service Pipes at its sole discretion (after receipt of an application from the SLO) partially release and return part or all of the Service Pipe Deposit together with interest thereon.

7.10 This clause shall survive the termination or disclaimer of the Agreement

8. Vesting of the Water Main and Payment of the Asset Value

8.1 The Undertaker shall be under no obligation to connect and commission the Water Main to the Undertaker's existing water distribution network or to pay the Asset Value unless in the Undertaker's sole determination:

8.1.1 the Self Lay Works, other than the Service Pipes, have been properly constructed to the Undertaker's reasonable satisfaction in accordance with the Specification; and

8.1.2 the requirements of section 1.9 of the Code of Practice have been fulfilled;

8.1.3 the Undertaker is reasonably satisfied Service Pipe Connections will be made to the Water Main within a reasonable period after the satisfactory commissioning of the Water Main and its connection to the public water supply network to avoid the risk that the quality of the water in the Water Main or the public water supply network might become impaired; or

8.1.4 connection of the Water Main to the Undertaker's public water supply network is likely to compromise the integrity of that network and/or the quality of the water to be supplied by the Undertaker to any customer; or

8.1.5 the Developer has failed to secure the transfer of such land or the grant of such a Deed of Easement as is specified in clause 4.7; or

8.1.6 there is any dispute between the Developer, the SLO, the Owner or an Adjoining Owner (or any combination thereof) or with any third party concerning the Self Lay Works.

8.2 Notwithstanding the satisfactory commissioning of the Water Main and its connection to the Undertaker's public water supply network, the Water Main shall not be formally vested in the Undertaker unless the requirements of clause 8.1 have been met in full and any defects notified to the SLO have been rectified in accordance with the Specification whereupon the Undertaker shall supply to the SLO and the Developer a vesting declaration (in the form annexed hereto) providing written confirmation of the vesting and the date of commencement of the Defects Liability Period.

8.3 Thereupon, the Undertaker shall pay to the Developer the Asset Value (or part thereof) within 20 Days of the receipt of an invoice from the Developer.

9. Vesting of Service Pipes

9.1 Subject to the SLO and Developer complying their respective obligations in respect of the Service Pipes, including clauses 3, 4 and 9.2, all Service Pipes which are connected to the Water Main or any other water main vested in the Undertaker in accordance with the Service Pipe Construction Programme shall upon the making of such Service Pipe Connections vest immediately in the Undertaker PROVIDED THAT the Undertaker may refuse to vest any Service Pipes which the Undertaker considers have not been satisfactorily constructed in accordance with the Specification or if any Defects in connection therewith have not been made good to the satisfaction of the Undertaker.

9.2 Immediately upon the making of any Service Pipe Connection, the SLO shall provide in writing to the Undertaker the meter serial number, meter size, meter location, full postal address of the property served by the Service Pipe and, if available, the name and address of the owner and occupier of the property and the date that that person became (or will become) the owner and/or occupier, together with any other information specified by the Undertaker in respect of the Service Pipe. (For the avoidance of doubt, the Service Pipe shall not vest in the Undertaker under clause 9.1 until this information has been provided to, and received by, the Undertaker.)

9.3 If the SLO has not already provided the name and address of the owner or occupier of the property, the Developer shall provide such information and the date that that person became (or will become) the owner and/or occupier in writing to the Undertaker as soon as reasonably practicable and, in any event, within 5 Working Days of the commencement of their ownership and/or occupation. Pending receipt of such information, the Developer shall remain liable to the Undertaker for payment of the water and sewerage charges due in respect of the property.

9.4 Nothing herein shall affect the liability of any party or any other person to pay the Undertaker's Infrastructure Charges in accordance with the Undertaker's Charges Scheme.

10 Indemnity

10 The Developer agrees to indemnify the Undertaker in respect of:

10.1 all actions charges claims costs demands and expenses properly payable or incurred which may be made against them jointly or separately in connection with or arising out of the construction and completion of the Self Lay Works;

10.2 all sums payable to secure a transfer of land or grant of a Deed of Easement in the Undertaker's standard form in relation to the Water Main (including, where applicable, valuation and legal fees);

10.3 liability of every kind for breach of any Act, regulation, code of practice, byelaw or other requirement which applies to the Self Lay Works

10.4 any acts performed by the Undertaker on behalf of the SLO pursuant to clause 7.

11 Variation

11. Without prejudice to the provisions of clause 3 hereof the Undertaker may require (acting reasonably), or at the request of the SLO, may permit the Self Lay Works to be constructed otherwise than in strict conformity with the Specification and the phasing programmes set out in Schedule 1 PROVIDED THAT:

11.1 before making any request for a variation, the SLO shall give a minimum of 5 Days notice to the Developer and the Undertaker so that a meeting can be arranged to discuss the proposal.

11.2 in the event that the Self Lay Works take longer to construct than the Construction Period the Undertaker shall have the right to review and vary the Specification, the phasing programmes set out in Schedule 1, the Developer's Payment and the Undertaker's Works;

11.3 any variation (other than a variation required by the Undertaker to provide water supply services to any other site or premises) shall be undertaken at the SLO's expense;

11.4 the SLO shall not make any variation without the Undertaker's prior consent in writing;

11.5 nothing in this clause shall permit or authorise any breach of the Specification; and

11.6 every variation shall be agreed in writing by all parties and shall be annexed to this Agreement.

12 Disputes

12.1 All questions, disputes, or differences (other than those that fall to be dealt with by the Water Services Regulation Authority under the Act or the Code of Practice) which may arise at any time in relation to this Agreement shall be referred in the first instance to a senior manager of those parties who will attempt in good faith to resolve any issue but failing resolution within 10 Days may be referred with the agreement of those parties to mediation in accordance with the Centre for Dispute Resolution (CEDR) Model Mediation Procedure.

12.2 If the parties in dispute do not agree upon mediation within 5 Days of such a reference or have not settled the dispute by mediation within 2 months of the initiation of the mediation, the dispute shall be referred to the decision of a single arbitrator mutually agreed upon or, failing such agreement within 10 Days, to be appointed by the President for the time being of the Chartered Institute of Arbitrators on the application of any of the parties in dispute and such arbitration shall be carried out in accordance with and subject to the applicable provisions of the Arbitration Act 1996.

13 VAT

13. In the event that the SLO, Developer or the Undertaker shall be liable to account to HMRC for Value Added Tax in respect of the performance of any of its obligations hereunder which shall constitute a taxable supply to the SLO, Developer or Undertaker then the SLO, Developer or the Undertaker (as the case maybe) shall be entitled to charge and forthwith be paid the amount of such tax upon production of a tax invoice

14 Service

14.1 All documents specified under this Agreement shall be delivered either by first class pre-paid post, e-mail or by personal delivery to the address of the party for whom such document is intended as stated at the head of this Agreement or such other address as may be notified in writing for that purpose.

14.2 Any documents so delivered shall be deemed to be received in the case of a letter sent by first class pre-paid post 2 Days after posting and in the case of an e-mail on proof of receipt. The contact name, address, telephone number and E-mail address of any parties may be altered at any time during the term of the Agreement by written notification to the other parties.

15 Contracts (Rights of Third Parties) Act 1999

15. This Agreement does not confer any benefit upon, nor create any right enforceable by any third party, but shall be enforceable by an owner or occupier for the time being of any premises connected or to be connected with the Self Lay Works.

16 Warranties

16. Nothing in this Agreement shall imply any obligation on the part of the Undertaker to any party to this Agreement to ensure that the Self Lay Works or any part or parts of the same are properly constructed.

17 Termination

17. If notwithstanding the application of the provisions of clause 7 of this Agreement any outstanding Defects or maintenance issues in respect of the Self Lay Works remain unresolved or the SLO or the Developer shall be adjudicated bankrupt or shall go into receivership, liquidation voluntarily or otherwise, or shall execute a deed of assignment or arrangement for the benefit of, or otherwise compound with, its creditors (except for the purpose of re-construction or amalgamation) the Undertaker may without prejudice to its other rights remedies and powers against the SLO and the Developer by notice in writing to the SLO, Developer and Surety terminate this Agreement and upon such notice being served this Agreement shall immediately terminate but such termination shall not affect any liabilities which have accrued prior to the date of termination and shall be without prejudice to the Surety's obligations to the Undertaker.

18 English Law

18. The provisions of this Agreement shall be governed by and interpreted in accordance with English Law and the parties submit to the exclusive jurisdiction of the English Courts.

19 Waiver of Rights

19. No failure or delay on the part of any party to exercise any of its rights under this Agreement shall operate as a waiver thereof nor shall any single or partial exercise of any such rights preclude any other or further exercise thereof. Any waiver by any party of any breach by another of any of its obligations under this Agreement shall not affect the rights of the waiving party in the event of any further or additional breach of breaches.

20 Void Provisions

20. If any provision of this Agreement is held by any court or other competent authority to be void or unenforceable in whole or in part, this Agreement shall continue to be valid as to the other provisions hereof and the remainder of the affected provision. The parties agree to attempt to substitute for any invalid or unenforceable provision a valid or enforceable provision, which achieves to the greatest extent possible the economic, legal and commercial objectives of the invalid or unenforceable provision.

SIGNED on behalf of the parties the day and year first before written

Signed on behalf of **[the Undertaker]***

By:

Authorised Person

Signed on behalf of **[the Developer]***

By:

Authorised Person

Signed on behalf of **[the SLO]***

By:

Authorised Person

Signed on behalf of **[the Owner]***

By:

Authorised Person

Signed on behalf of **[the Adjoining Owner]***

By:

Authorised Person

Signed on behalf of **[the Surety]***

By:

Authorised Person

(NB. The Agreement cannot be signed by an agent acting on behalf of any party.)

SCHEDULE 1

Water Main Phasing Programmes

(previously approved as part of the design of the Self Lay Works)

* insert programme

SCHEDULE 2

(The Undertaker's Works)

1. Construction of any other water main and any associated infrastructure and accessories from …… to ……..…… as shown on Drawing no.*

2. Diversion of an existing water main from …… to …….. as shown on Drawing no*

3. Reinforcements (including those made pursuant to section 51A(7)(a) of the Act), namely: …….from …… to …….. as shown on Drawing no*

4. Sampling of the Water Main

5. Any Mains Connection(s)

[This Schedule must be completed. If none, specify none.]

Schedule 3
Costs Schedule (for information)

Item	Description	Costs
1.	Inspection Fee	
2.	Extra Site visit	
3.	Commissioning and Connection to Public Water Supply Network	
4.	Water sampling and quality analysis	
5.	Each additional sample	
6.	Connection Charges in respect of Service Pipe Connections (Undertaker to fit meter)	
7.	Connection Charges in respect of Service Pipe Connections (SLO to fit meter)	
8.	Water Infrastructure Charge	
9.	Sewerage Infrastructure Charge	

SECTION 7 SITE SPECIFIC AGREEMENT

Dear

SELF LAY OF WATER MAINS AT

Further to our Framework Agreement dated , this letter sets out the site-specific details for self lay of water mains and or services at the above location.

1. The Site

The site is located at

and will consist of [ ] properties when development has been carried out.

2. The Water Main and Services

The Water Main to be provided on the site will be [ ] metres of [ ] mm diameter water main.

Services will be provided on the site to plots [ ] at[ ] mm diameter.

3. The Contractor

The works will be carried out by the Company's Contractor …….

4. Pre-Construction Meeting

A meeting shall be held between the Company, its Contractor and Portsmouth Water to agree the start date and construction practices, and at which evidence of the Contractor's competence (see Work and Material Specification) is to be provided. No part of the Works shall be commenced until the meeting has taken place and all issues have been dealt with to Portsmouth Water's satisfaction.

5. Financial Details

Option A

The payments to be made by the Company to Portsmouth Water are:

Item	Description	Costs
1.	Inspection Fee	
2.	Extra Site visit	
3.	Commissioning and Connection to Public Water Supply Network	
4.	Water sampling and quality analysis	
5.	Each additional sample	
6.	Connection Charges in respect of Service Pipe Connections (Undertaker to fit meter)	
7.	Connection Charges in respect of Service Pipe Connections (SLO to fit meter)	
8.	Water Infrastructure Charge	
9.	Sewerage Infrastructure Charge	

Service connections will be provided by a plumber recognised by Watermark or an equivalent scheme, up to and including the entry point and wall mounted meter box installation within each plot. In addition to the above the Company shall pay Portsmouth Water's for Water for Construction at £[ ].

Option B

The asset value less the Company's commuted sum contribution, if applicable, to be paid by Portsmouth Water to the Company will be:

These/this sum(s) are based upon the Company's notification that the development will consist of [ ] properties based on [ ] phases constructed within a timescale of [ ]. If the number of properties, phases or the stated construction period changes, then Portsmouth Water will recalculate the above sums and the Company shall pay the recalculated sums.

6. Framework Agreement

The works to be carried out by the Company shall be in accordance with this Site Agreement and subject to the Framework Agreement referred to above and all documents referred to therein.

8. Completion/Handover

The Water Main shall be and at all times remain the property of Portsmouth Water and will be a public water main from the time when it is connected by Portsmouth Water to the existing public water supply network and satisfactorily commissioned, but subject to the responsibility of the Company during the defects liability period.

Please countersign below to indicate acceptance of these terms.

Yours faithfully,

Portsmouth Water Limited

Countersigned by ……..

On behalf of ……..

Date ……...

Enclosures

Plan of proposals

Copy of the Guidance Notes

Second copy of Site Agreement

SECTION 8 GUIDANCE ON CHARGING ARRANGEMENTS

8. GUIDANCE ON CHARGING ARRANGEMENTS

8.1. Basis of Mainlaying Charge

8.1.1 When a new water main or sewer is needed, the owner or occupier of the premises can ask the water or sewerage company to install the pipework. When a new water supply or sewer is required for domestic purposes, this is known as requisitioning.

There are two mechanisms for paying for requisitions under the Water Industry Act 1991 (WIA91). Requisitioners can either:

• make yearly payments to water and sewerage companies for up to 12 years (the relevant deficit option); or

• pay a statutory commuted sum, the discounted aggregate.

Alternatively, the owner or occupier of the premises may choose their own contractor to carry out the work, which the local water company then adopts. This is known as 'self-lay'.

- ***Infrastructure charges***

Section 146(2) of WIA91 entitles Portsmouth Water to raise a charge where connections for water supplies for domestic purposes are made for the first time to premises. This is regardless of who carries out the work and is known as the infrastructure charge. The payment of infrastructure charges is due when premises are connected to the water main.

- ***Relevant deficit charges***

Under section 43(2) of WIA91, the relevant deficit is defined as the amount (if any) by which the annual borrowing costs of a hypothetical loan for the cost of providing the new main exceeds the revenue for that year from customers connected to that main. The relevant deficit is calculated and payable over a period of 12 years after the main has been provided, so it is based on the actual costs of carrying out the work.

Portsmouth Water is not required to make a payment to the requisitioner when the revenue from the newly-connected premises exceeds the costs of financing the new main. At this point, the relevant deficit becomes zero. Because of this, the allowance made for revenue will not equal the actual revenue received if this is higher than the annual borrowing costs of a loan. The capped level of revenue that is used to calculate requisitioning charges is referred to in this document as the income allowance.

A worked example is provided at the end of this section.

- ***Payment by statutory commuted sum***

Developers can also pay for mains using the discounted aggregate deficit (DAD) method, which is sometimes referred to as a single statutory commuted sum. Sections 43A(1) and (6) of WIA91 state that this is an amount equal to the sum of the estimated relevant deficits for each of the 12 years following the provision of the main, in each case discounted to a net present value.

Under section 42(2)(a)(ii) of WIA91, the finalised statutory commuted sum is payable when the work has been completed and the actual costs of the work are known. These actual costs will be used to calculate the finalised statutory commuted sum charge. To calculate the

statutory commuted sum, Portsmouth Water estimates the cost of a hypothetical loan and the revenue we will receive from newly-connected properties.

Section 42(6) of the WIA91 states that when the finalised statutory commuted sum has been calculated, including any amount for network reinforcement, any dispute about the amount of the statutory commuted sum can be referred to Ofwat.

Financing Methods

The Developer may select either method of financing the main and will be offered such terms upon requisitioning the mains.

Should the Developer elect to self lay mains, which would normally have been requisitioned, Portsmouth Water will pay to the Developer upon successful commissioning of the mains and full compliance with the Standards and Specification and payment of monies due to Portsmouth Water by the Developer, the asset value for the main. The asset value will be derived from the out-turn scheme.

8.2. Asset Value Payable to the Developer

Under sections 51C(6) and (9) of WIA91, the asset payment is calculated as the sum of the estimated offsets for each of the 12 years following the adoption of the main, in each case discounted to a net present value. The offset is the lesser of the estimated revenue from the adopted main or the annual borrowing costs of a hypothetical loan for the costs of providing the main. This mechanism ensures that the revenue is capped in the same way as when requisitioning charges are calculated.

The asset payment is payable when the water company adopts the main under section 51C of WIA91.

The calculation is based on estimates of the annual borrowing cost and the revenue that will be received from newly-connected properties, as well as the estimates of how much the overall cost of the work would have been if Portsmouth Water had carried out the work as part of a requisition.

Before the work is carried out, Portsmouth Water will estimate the asset payment and once the work has been carried out and the asset payment is due, the final calculation may be adjusted to account for changes in estimates of revenue or the overall costs of the work. For this reason, the final asset payment may vary from the original estimated asset payment.

Under section 51C(11) of WIA91, disputes about the level of the asset payment can be referred to Ofwat us for determination.

The asset payment is made when the main is adopted by the Company

The construction and renewal of mains within Portsmouth Water are completed by a Period Contractor. The length of contract period varies to reflect the optimum construction rates available within the market. The contract is awarded following a process of competitive tendering, the lowest tendered cost is not necessarily accepted.

The asset value paid to the Developer will be based upon the out-turn scheme and equivalent mainlaying construction value calculated using current period contract rates. Alternative higher rates submitted by the Developer will not be accepted for the calculation of equivalent construction value.

The purchase price of materials, associated sub-contracts and equivalent construction values are summed to provide the asset value which forms the basis of the regulatory accounts.

8.3 Worked Example of Calculating the Relevant Deficit, Statutory Commuted Sum and Asset Payment

Please note: This worked example is intended to be an explanation of the methodology that is used to calculate charges. As such it is an example only and is simplified. The values do not necessarily reflect actual rates.

Variables	
Total scheme cost	£ 35,000.00
Number of properties	150
Average income per property	110
Interest rate for borrowing	6.50%
Discount rate	6.50%
Long term annual inflation	3.0%
Number of applicable years	12

The projected future revenue is the number of properties connected in the relevant year, (based on a cumulative occupancy) multiplied by the income per property that will be received and increased each year in line with inflation.

Calculation of relevant deficit for the installation of water infrastructure

In the example below, please note that in year two revenue is calculated by assuming an occupancy rate of 75 properties. This is then multiplied by a revenue figure of £110. Inflation of 3% will need to be added to the £110. This equals 75 x £110 plus 3% inflation. This equals £8,497.50. The same methodology is be used when calculating year three onwards.

Year	**Projected future revenue**	**Annual borrowing costs**	**Income allowance**	**(Projected) relevant deficit**
1	£ 1,100.00	£ 4,289.90	£ 1,100.00	£ 3,189.90
2	£ 8,497.50	£ 4,289.90	£ 4,289.90	£ -
3	£ 17,504.85	£ 4,289.90	£ 4,289.90	£ -
4	£ 18,030.00	£ 4,289.90	£ 4,289.90	£ -
5	£ 18,570.90	£ 4,289.90	£ 4,289.90	£ -
6	£ 19,128.02	£ 4,289.90	£ 4,289.90	£ -
7	£ 19,701.86	£ 4,289.90	£ 4,289.90	£ -
8	£ 20,292.92	£ 4,289.90	£ 4,289.90	£ -
9	£ 20,901.71	£ 4,289.90	£ 4,289.90	£ -
10	£ 21,528.76	£ 4,289.90	£ 4,289.90	£ -
11	£ 22,174.62	£ 4,289.90	£ 4,289.90	£ -
12	£ 22,839.86	£ 4,289.90	£ 4,289.90	£ -
Total	£ 210,270.99	£ 51,478.79	£ 48,288.89	£ 3,189.90

Calculation of statutory commuted sum for the installation of water mains infrastructure

Year	(Projected) relevant deficit	Discount factor	Statutory commuted sum
1	£ 3,189.90	0.93897	£ 2,995.21
2	£ -	0.88166	£ -
3	£ -	0.82785	£ -
4	£ -	0.77732	£ -
5	£ -	0.72988	£ -
6	£ -	0.68533	£ -
7	£ -	0.64351	£ -
8	£ -	0.60423	£ -
9	£ -	0.56735	£ -
10	£ -	0.53273	£ -
11	£ -	0.50021	£ -
12	£ -	0.46968	£ -
Total	£ 3,189.90	8.15873	£ 2,995.21

Calculation of the asset payment that is made for self-laid water mains for domestic purposes

Year	Income allowance	Discount factor	Asset payment
1	£ 1,100.00	0.93897	£ 1,032.86
2	£ 4,289.90	0.88166	£ 3,782.23
3	£ 4,289.90	0.82785	£ 3,551.39
4	£ 4,289.90	0.77732	£ 3,334.64
5	£ 4,289.90	0.72988	£ 3,131.12
6	£ 4,289.90	0.68533	£ 2,940.01
7	£ 4,289.90	0.64351	£ 2,760.58
8	£ 4,289.90	0.60423	£ 2,592.09
9	£ 4,289.90	0.56735	£ 2,433.89
10	£ 4,289.90	0.53273	£ 2,285.34
11	£ 4,289.90	0.50021	£ 2,145.86
12	£ 4,289.90	0.46968	£ 2,014.89
Total	£ 48,288.89	8.15873	£ 32,004.90

8.4. Design and Construction Charges to Developer for Self Lay Scheme

For self lay projects of up to 200 properties our standard Engineering Design and Construction Charges outlined below will apply. Charges for schemes greater than 200 properties will be site-specific and provided upon receipt of details agreed with the applicant. Early discussions are encouraged.

The Design and Construction Charges are indicative as each Developer will wish for his SLO to complete differing elements of the project. Portsmouth Water will offer a solution tailored to the business needs of the Developer. The charges are indicative and based on site being completed in one visit (2 weeks).

The Developer will be required to pay other charges as due to Portsmouth Water as outlined in the Formal Agreement and Site Specific Agreement.

No. of Properties	Initial Enquiries £	Terms Officer Technical Appraisal and On-site Design £	Minor Revisions £	Major Revisions £	Checking of Site Design by Others £	Site Inspections £	Sampling & Analysis £
0-50	58	282	166	282	282	937	334
51-150	58	282	166	282	282	2812	334
150-200	58	282	166	282	282	3749	334

8.5 Charges to Developer for Self Lay Services

If the Developer wishes, the SLO may self lay services in accordance with the current Water Supply (Water Fittings) Regulations, and the Standards and Specifications set out in the Self Lay Mains and Services Guide. Technical details and site-specific layouts will be agreed with the SLO at the detailed design stage.

The Developer will be required to pay an infrastructure charge when a premise is connected for the first time. The standard charges are set out in the standard Scheme of Charges issued with the self lay water mains procedure guide

The Developer will not be paid an asset value for the new service, boundary box or wall mounted meter box.

Should the Developer require Portsmouth Water to install the services, the charges are set out in the standard Scheme of Charges issued with the self lay water mains procedure guide.

Water for construction will be charged irrespective of the method elected to provide the mains and services.

8.6 Service Pipe Administration/Water Regulation Inspection

The service pipe and wall mounted meter box will be inspected and approved prior to authorisation to connect to the distribution main. A fee for this inspection is payable and will be based upon the phasing and number of connections to be made. An infrastructure charge is payable at this time.

8.7 Building Water

Building Water will be charged for in accordance with Portsmouth Water's standard Scheme of Charges.

8.8 Disputes on Financial Conditions

Any dispute about the financial conditions to Self Lay water mains including the level of security and charges for the work may be referred to Ofwat.

SECTION 9 SERVICE STANDARDS AND CHARGES SCHEDULE

9. SERVICE STANDARDS AND CHARGES SCHEDULE

9.1 Service Standards

Portsmouth Water recognises the importance of processing all applications for water supplies promptly and to mutually agreed timescales.

It is often necessary to complete a technical appraisal to determine where a development may be connected to the existing network together with an assessment of any off-site reinforcement required to supply the site. Upon completion, the detailed design of the on-site and off-site mains layout may be progressed.

It is common for Developers to contact us once they have completed their site layout leaving a short timescale to complete a network assessment.

We encourage early initial enquiries in order that we may identify whether any exceptional reinforcements are required. Detailed discussion may then proceed in order that the technical appraisal is progressed within an acceptable timescale.

Large sites are commonly constructed in phases with detailed design following the release of phases. If layout changes occur which requires the redesign, including income allowances, diversion of previously laid mains or out of sequence construction, delay and additional charges may be experienced.

Portsmouth Water has specific statutory duties with respect to timescales for the construction of mains and services. Wherever practicable, work will be completed to mutually acceptable timescales. Guidance is given below on typical timescales:

- Checking and acknowledging completeness of application from receipt — 3 working days
- Technical appraisal and site design up to 500 properties — 20 working days
- For development >500 properties, or significant difficult design. Timetable for full details sent within — 10 working days

Where SLO elects to do the design

- Specification for design from Company — 10 working days
- Checking design and provision of non-contributable cost and asset payment by Company — 15 working days
- PortsmouthWater check of final details and application unless significant changes - of house numbers, layout etc — 5 working days
- PortsmouthWater checks and verifies competence of proposed non WIRS accredited SLO staff. — 5 working days
- Draft Formal Agreement issued after approval of drawings and programme — 5 working days

Site Service Standards

- Verification of medical and competency records and acceptance/refusal of employees — 5 working days
- Making suppliers available for mains connections — 5 working days
- Taking of sample for water quality test — 3 working days

- Connection to existing mains system after satisfactory bacteriological tests and provision of as laid drawings — 10 working days
- Where requested by SLO install a connection spur from existing mains on receipt of payment and Self lay agreement — 15 working days
- Where requested by SLO install a mains connection to the existing mains on receipt of payment and completed Self lay application — 3 working days
- Where requested by SLO connection of Services on Receipt of Payment — 14 days
- Where requested by SLO laying and connection of services on receipt of payment — 21 days
- Fitting of meter where requested by SLO or provision of meter to SLO — 5 working days

9.2 Charges Schedule

Once details of a site have been agreed the Company will provide a potential SLO with costs applicable to the site completed in the template below.

For work carried out by the water company when a Developer or SLO lays the water mains and service pipes.

This table lists the costs for the work that the water company will insist on carrying out and the quotations for relevant deficit and commuted sum charges and payment for asset.

Site: .....

Date: .....

Item No	Description of tasks	Details	Costs
	Onsite works		
a)	Approval of designs of on-site works produced by the Developer//SLO		
b)	Diversions		
c)	Wayleaves or easements		
d)	Inspection and supervision of contestable work		
e)	Connection to water company's existing network		
f)	Water sampling and quality analysis		
	Off-site works		
g)	Design of off site-works		
h)	Off-site diversions		
i)	Wayleaves or easements		
j)	Inspection and supervision of contestable work		
k)	Connection to water company's existing network		
l)	Water sampling and quality analysis		

Charges quotations

Item No	Payment	Amount
m)	Charge for network reinforcement	
n)	Infrastructure charges	
o)	Estimated statutory commuted sum charge	
p)	Estimated payment for asset	

SECTION 10 WORK AND MATERIAL SPECIFICATION FOR SELF LAY OF WATER MAINS AND SERVICES

SECTION 10

WORK AND MATERIAL SPECIFICATION

FOR SELF LAY OF WATER MAINS AND SERVICES

CONTENTS

10.1 INTRODUCTION

10.1.1 Definition - Competent Contractor

10.2. GENERAL

10.2.1 Entry onto the Site
10.2.2 Water Supply Hygiene
10.2.3 Contractor's Working Hours – Work Requiring Supervision
10.2.4 Work in Contaminated Ground
10.2.5 Materials
10.2.6 Materials to be Used
10.2.7 Construction of Pipelines
10.2.8 Pipelaying, Backfilling and Reinstatement
10.2.9 Contract Drawings

10.3. MATERIALS

10.3.1 Storage Handling and Use of Materials
10.3.2 Ductile Iron Pipes and Fittings
10.3.3 Gaskets for Flanged Joints
10.3.4 Hydrants
10.3.5 Mechanical Couplings for Pipelines and Fittings
10.3.6 Nuts, Screws, Washers and Bolts
10.3.7 Pipe Surround Materials
10.3.8 Pipes for Ducts
10.3.9 Polyethylene Pipes and Fittings
10.3.10 Preformed Chambers and Covers
10.3.11 Wall Mounted Meter Boxes
10.3.12 Valves
10.3.13 Service Size Water Fittings and Appliances

10.4. EXCAVATION

10.4.1 Excavation in Pipe Trenches
10.4.2 Trench Bottom
10.4.3 Depth of Pipe
10.4.4 Underground Plant

10.5. REFILLING

10.5.1 General
10.5.2 Materials for Backfilling
10.5.3 Surround for Ductile Iron Pipes
10.5.4 Surround for Polyethylene Pipes
10.5.5 Backfill in Field and Verges
10.5.6 Backfill in Tracks and Unmade Footpaths
10.5.7 Backfill in Made-up Footpaths
10.5.8 Backfill in Roads

10.6. TEMPORARY REINSTATEMENT

10.6.1 Temporary Reinstatement of Fields and Verges
10.6.2 Temporary Reinstatement of Tracks and Unmade Footpaths
10.6.3 Temporary Reinstatement of Made-up Footpaths
10.6.4 Temporary Reinstatement of Roads
10.6.5 Marker Posts and Plates
10.6.6 Maintenance of Reinstatement

10.7. PIPELAYING AND JOINTING

10.7.1 Pipelaying Generally
10.7.2 Welded Joints in Plastic Pipes
10.7.3 Protection of Joints
10.7.4 Cutting Pipes
10.7.5 Thrust Blocks
10.7.6 Sluice Valves, Fire Hydrants and Air Valves
10.7.7 Underground Chambers
10.7.8 Tolerances of Pipelines
10.7.9 Mainlaying and Service Records

10.8. TESTING AND DISINFECTION

10.8.1 Operations and Precautions Prior to Testing Pipelines
10.8.2 Testing Method Programme and Notification
10.8.3 Testing of Pressure Pipelines (excluding Thermoplastic Pressure Pipes)
10.8.4 Testing of Thermoplastic Pressure Pipelines
10.8.5 Swabbing of Water Mains
10.8.6 Disinfection, Sampling and Operation of Water Mains
10.8.7 Water for Testing, Swabbing and Disinfection
10.8.8 Disposal of Water from Cleansing, Testing or Disinfection

10.9. SERVICE PIPES DESIGN AND INSURANCE

10.9.1 Design
10.9.2 Materials

10.10. CONTRACT DRAWINGS

10.1. INTRODUCTION

Portsmouth Water will permit the self lay of new water mains subject to the work being done by competent contractors to comparable standards to mains laid by Portsmouth Water.

This document specifies the work and material specification for self lay of water supply installations as referred to in the Framework Agreement relating to the self lay of water mains. Within the Work and Material Specification for Self Lay of Water Supply Installations, the term Self Lay Organisation and Contractor are mutually interchangeable.

10.1.1 Definition – Competent Contractors

Competent Contractors are those who can demonstrate their competence by holding the following qualifications:

1. Strictly adhere to the requirements of the Portsmouth Water Hygiene Code applicable to mains and servicelaying and hold an EU skills National Hygiene Card.

2. Preferably at least one operative in each crew to hold either a NVQ Level II in Public Utilities Distribution Mainlaying or Servicelaying or an equivalent City & Guilds qualification or an EU skills Network Construction Operations (Water) qualification, as appropriate for the work being done. Where formal qualification has not been achieved Portsmouth Water will review and assess CV's and confirm that an acceptable level of competence has been demonstrated before work commences.

3. At least one operative in each crew to hold the appropriate New Roads and Street Works Act Licence.

4. From 1st January 2006 SLOs should be registered with the Water Industry Registration Scheme (WIRS), managed by Lloyds which will demonstrate competency in Self Lay.

10.2. GENERAL

10.2.1 Entry onto the Site

10.2.1.1 Where a main or pipework is laid in private land other than land owned by the Developer, the Contractor must not take entry until expiry of notice served by Portsmouth Water. The provision of a free easement may be required.

10.2.1.2 Upon completion of work in any part of the site the Contractor shall restore the surface to the satisfaction of the landowner. Claims for damage will be the responsibility of the Contractor.

10.2.1.3 The Contractor is also responsible for liaising with all statutory undertakers and for obtaining details of their apparatus that could be affected by the works.

10.2.2 Water Supply Hygiene

10.2.2.1 The Contractor shall ensure that his workforce is conversant with and at all times applies the recommendations laid out in 'Principles of Water Supply Hygiene and Technical Guidance Notes' - Water UK 1996, supplemented in 1998, whenever working with, on or adjacent to the Portsmouth Water's apparatus.

10.2.2.2 The Contractor shall further comply with and ensure that each member of his workforce complies with and is conversant with the 'Guidance on Safeguarding the Quality of Public Water Supplies- - DWI 2001.

10.2.2.3 The Contractor's staff will be required to complete a hygiene questionnaire supplied by Portsmouth Water prior to commencing works. No person shall be employed on work until Portsmouth Water provide written approval.

10.2.2.4 The Contractor must provide the use of toilet facilities. These must not lead to contamination of water supplies.

10.2.2.5 Any Contractor's employee involved in the work must not work at sites where they may come into contact with sewage or sewage sludge.

10.2.2.6 Valves and hydrants on live water mains **must** only be operated by Portsmouth Water.

10.2.2.7 Adequate warning shall be given to enable Portsmouth Water to arrange customer warnings in accordance with its Guaranteed Standards of Service. Hence ten working days should be allowed for the main to be connected after being satisfactorily bacteriologically tested.

10.2.3 Contractor's Working Hours – Work Requiring Supervision

10.2.3.1 The Contractor shall normally work between 07.30 – 17.00 Monday to Friday and not on Bank Holidays.

10.2.3.2 If the Contractor wishes to work outside the above times, he shall seek Portsmouth Water approval at least a week in advance. Additional supervision fees will be required if essential work is done outside the above hours.

10.2.4 Work in Contaminated Ground

10.2.4.1 Prior to submitting a design for approval the Contractor shall identify all areas of the work where the soil has been affected by previous land use, groundwater leaching or infiltration by chemicals or other substances.

10.2.4.2 Where taken the Contractor must notify Portsmouth Water of the results of its ground investigations and of any contaminated land encountered during construction.

10.2.5 Materials

10.2.5.1 The schedule of pipes and fittings to be supplied and installed by the Contractor will be agreed by Portsmouth Water. No alternative materials will be allowed.

10.2.5.2 For detailed material specification refer to material specification section.

10.2.6 Materials to be Used

10.2.6.1 The materials used on the works must have been specifically acquired for the proposed work. The type of material used must be consistent throughout the extent of the work.

10.2.6.2 All materials must comply with current Portsmouth Water specification.

10.2.7 Construction of Pipelines

10.2.7.1 All the works are to comply with the requirements of the New Roads and Street Works Act 1991 and Regulations made under that Act and any relevant Code of Practice and Portsmouth Water's Code of Practice for the Exercise of Works Powers.

10.2.7.2 The term 'Highway' shall include verge, road, lane, footway, footpath, alley, passage, square or court.

10.2.8 Pipelaying, Backfilling and Reinstatement

10.2.8.1 All pipelaying and backfilling is to be carried out as detailed in Section 5 – 'Construction of Pipelines'.

10.2.8.2 All highway reinstatements are to be undertaken in accordance with the Specifications for the Reinstatement of Openings in the Highway (SROH). Highway shall include verge, road, lane, footway, footpath, alley, passage, square or court.

10.2.8.3 All non-ferrous mains are to be laid with a pipeline marker tape containing a tracer system.

10.2.8.4 The work shall be in accordance with the agreed drawings including details of the location of all valves, hydrants, etc. Any variance to the drawings shall only be as directed or approved by Portsmouth Water.

10.2.8.5 Pipes shall be laid at a minimum cover of 900mm unless otherwise directed by Portsmouth Water.

10.2.8.6 Wherever possible the disposition of mains in footway shall be in accordance with the NJUG Volume 2 – Guidelines for the positioning of Underground Utility Apparatus for new developments (Issue 2).

10.2.8.7 Except when mainlaying and jointing is being carried out, all open ends of pipes must be sealed with a purpose made watertight stopper. The ends of pipelines shall be securely capped off at the end of each working day and individual pipes shall be anchored to prevent flotation.

10.2.9 Contract Drawings

10.2.9.1 The Contractor is to comply with the following standard drawings list:

Portsmouth Water Drawing Nos.

108/1/12	Typical Indicator Post Installation
4/110	(Sheet 1) Typical Arrangement for Connections to Existing Mains
	(Sheet 2) - ditto -
108/1/66	Typical Sluice Valve Installation
108/1/67	Typical Fire Hydrant/Washout Installation
108/1/68	Typical End Fire Hydrant Installation
108/1/69	Typical Air Valve Installation
108/1/59	Multiple Service Connections
108/1/70	Typical Meter, Stopcock Combination Unit Arrangement
108/1/71	Typical Meter, Stopcock Combination Unit Arrangement for Shallow Services
108/1/72	Thrust Block Sizes
108/1/73	Wall Mounted Meter Box

10.3. MATERIALS

10.3.1 Storage Handling and Use of Materials

10.3.1.1 The Contractor shall provide all materials to complete the works in accordance with the specification.

10.3.1.2 The Contractor shall notify Portsmouth Water of all material deliveries, and shall provide the opportunity to inspect the materials and delivery notes (if required).

10.3.1.3 The materials used on the works must have been specifically acquired for the proposed work. All materials used must be of consistent quality throughout the extent of the work.

10.3.1.4 All materials and products intended for use in the preparation or conveying of public water supplies must comply with Regulation 25 of the Water Supply (Water Quality) Regulations 1989.

10.3.1.5 Pipes up to and including 250mm for potable water shall normally be polyethylene (PE80 SDR11 12.5 bar), jointed by fully automatic butt fusion equipment or by use of electrofusion fittings. (250mm and above shall be PE100).

However in contaminated ground DI pipe with suitable factory applied protective coating is used for mains pipes

In addition, one proprietary coated PE pipe is available and, subject to the prior approval of Portsmouth Water for each site, can be used:

Protectaline for use in contaminated ground, manufactured by Durapipe-S&LP; available in 25, 32, and 63.

10.3.1.6 Pipes for potable water shall be delivered to site and stored on timber or an appropriate alternative, with end caps to prevent contamination of the pipes by debris or vermin. Pipes and fittings shall be adequately protected from contamination at all times. Large fittings shall be stored on pallets. Pipes and fittings shall be stored in a secure, clean area away from the working area, until they are required for installation.

10.3.2 Ductile Iron Pipes and Fittings

10.3.2.1 Flanged pipes and fittings shall be drilled to NP16.

10.3.2.2 For potable water applications pipes shall have an epoxy coated cement mortar lining to ensure full compliance with DWI Regulation 25(1)(a); and fittings shall have a cement mortar lining to ensure full compliance with DWI Regulation 25(1)(b).

10.3.2.3 External protection for normal ground conditions shall be factory applied blue epoxy.

Tyton joint areas and simple fittings shall be protected using purpose made PE muffs.

Bolted joints and fittings shall be protected to P1 (application of petroleum paste primer and profiling mastic, followed by protective tape wrap).

10.3.3 Gaskets for Flanged Joints

10.3.3.1 Gaskets for flanged pipe joints shall be of the inside–bolt-circle type (full faced).

10.3.3.2 The dimensions of gaskets shall comply with BS 4865:Part 1.

10.3.3.3 Gaskets shall be manufactured from Type WA material complying with the provisions of BS EN 681-1: 1996 Issue 2 December 1998.

10.3.3.4 The material shall have a hardness within the range 76-85 IRHD.

10.3.4 Hydrants

10.3.4.1 Hydrants shall be screw-down type (Type 2) to BS 750.

Spindle seal shall be double toroidal sealing ring (0-ring) type. Seals shall be capable of being replaced with the valve under pressure.

Screwed outlet shall be of copper alloy.

A blank drain plug shall be provided on the outlet side.

Hydrants shall be fitted with fixed jumpers unless specified otherwise.

Direction of closure shall be clockwise.

Bolting, other than valve to piping, shall be as Clause 7.

10.3.4.2 Hydrants shall be coated in accordance with WIS No. 4-52-01 – Class A.

10.3.5 Mechanical Couplings for Pipelines and Fittings

10.3.5.1 Gaskets shall be manufactured from Type WA material complying with the provisions of BS EN 681-1: 1996 Issue 2 December 1998; and the material shall have a hardness within the range 76-85 IRHD.

10.3.5.2 Mechanical couplings and fittings shall be manufactured from any of the following materials:

a) Carbon steel – BS EN 10025 Grade S275 or better
b) Malleable iron – BS EN 1562 Grade EN-GJMB-350-10 or EN-GJMW-350-4
c) SG or ductile iron – BS EN 1563 Grade EN-GJS-450-10 or better
d) Stainless steel – BS 1449: Part 2: Austentitic Grade 304 or better

10.3.5.3 Nuts, screws, washers and bolts shall be in accordance with Clause 7, and coated in accordance with WIS No. 4-52-03.

10.3.5.4 All mechanical couplings shall be unregistered unless stated otherwise.

10.3.6 Nuts, Screws, Washers and Bolts

10.3.6.1 All non-stainless steel bolts, nuts and washers used for iron pipework flanges shall be coated in accordance with WIS No. 4-5-03 unless stated otherwise.

10.3.6.2 Bolts, nuts and washers made from other materials will not be allowed.

10.3.7 Pipe Surround Materials

All pipework exposed, laid or relaid shall have a granular or sand bed and surround as specified.

10.3.8 Pipes for Ducts

10.3.8.1 Polyethylene pipe shall be used for ducts for service pipes.

10.3.8.2 Pipe ducts shall be installed in accordance with the design.

10.3.9 Polyethylene Pipes and Fittings

10.3.9.1 Polyethylene pressure pipes shall comply with the relevant provisions of the UK Water Industry Combined Specification for Polyethylene Pressure Pipes for Pressurised Water Supply and Sewerage Duties (Final Draft WIS 4-32-17 dated March 1999).

Pipes in the range up to 63mm complying with BS 6572 (blue for below ground use) and BS 6730 (black for above ground use) are wholly acceptable.

10.3.9.2 Pipes shall be blue for cold potable water below ground and black for cold potable water exposed to light. Where pipes are exposed to light prior approval is required from Portsmouth Water.

10.3.9.3 The standard design maximum pressure ratings for polyethylene pipe shall be PE 80 SDR11 12.5 bar.

10.3.9.4 Coated or composite polyethylene pipes for special uses (to provide resistance to permeation of contaminants, scoring etc.) shall be permanently distinguished from plain solid wall, polyethylene pipes. The outer coating shall be self-coloured in the identifying colour specified for the core pipe material (PE80 or PE100), and shall incorporate four continuous brown co-extruded stripes at quarter points.

10.3.9.5 The Contractor shall provide confirmation from the pipe manufacturer of the following information required under clause 4.31 of WIS No. 4-32-17 (Final Draft March 1999):

a) Short term surge pressure resistance.

b) The lifetime at a pressure of 1.2 times MRS to determine the safe duration of pressure tests.

10.3.9.6 Polyethylene fusion joints and fittings shall comply with the relevant provisions of WIS No. 4-32-14 or WIS 4-32-15.

10.3.9.7 Mechanical joints and fittings for polyethylene pipes for use with cold potable water shall comply with WIS No. 4-24-01, Type 1 end load performance, or WIS No. 4-32-11.

10.3.9.8 Electrofusion fittings shall comply with the relevant provisions of WIS No. 4-32-14, in particular the supplier shall have demonstrated compliance with the talc contamination testing requirements of the WIS.

10.3.10 Preformed Chambers and Covers

10.3.10.1 Preformed chambers shall be polyethylene to BS 5834 and provided with covers in accordance with the table below:

Installation	Chamber	Cover
Sluice Valves	150mm PVC Tube Precast Concrete Support Section225 x 225	225 x 225 Grade A (Non rocking) Cast Iron/Ductile Badged 'SV'
Fire Hydrants	Poly Chamber 450 x 400	430 x 320 Grade A (Non rocking) Cast Iron/Ductile Badged 'Hydrant'
Air Valves	Poly Chamber 800 x 800	610 'Challenger' Hexagonal Grade A
Meter Installation 1" Nominal Bore 25mm	Poly Chamber 450 x 400	380 x 230 Cast Iron/Ductile Grade A
Meter Installation 1½" Nominal Bore 40mm	Poly Chamber 600 x 450	600 x 450 Two Piece Slide Out Grade A
Meter Installation 2" Nominal Bore 50mm	Poly Chamber 900 x 600	900 x 600 Valiant One Piece Slide Out Grade A
Meter Installation 3" & 4" Nominal Bore 80mm and 100mm	Block Built 1100 x 900 3 concrete lintels 1300 x 150 x 75	900 x 600 Valiant One Piece Slide Out Grade A

10.3.11 Wall Mounted Boundary Boxes

10.3.11.1 The Company's standard approach for installing water meters to new properties is based upon a wall mounted meter box (WMMB). The approved position allows easy and safe access to the combined stopvalve and meter for both the customer and the Company. The Developer will benefit from improved control of installation costs which includes eliminating the risk of damage to the conventional underground boundary meter box during the construction phase. Where it is not reasonably practicable to install a wall mounted meter box, the meter will be sited in an underground boundary meter box located in the public highway as close as practicable to the property boundary.

Developers are free to install any wall mounted meter box but the unit shall have all pipework joints accessible externally for future maintenance purposes. The wall mounted meter boxes shall be WRAS and WRc approved.

Specification for the Installation of Wall Mounted Meter Boxes (WMMB)

a) Authorisation to connect the service pipe to the self laid water main is dependent upon the successful completion of a Water Supply (Water Fittings) Regulations 1999 inspection which includes compliance with the Specification for the Installation of Wall Mounted Meter Boxes as per Appendix A.

b) Any Wall Mounted Meter Boxes may be used subject to compliance with the Specification and shall have all pipework joints and connections to the supply pipe accessible from outside the property.

c) The Wall Mounted Meter Boxes shall be approved by WRAS and WRc.

d) The Wall Mounted Meter Boxes shall be capable of accepting concentric meters such as the Kent MSM.

e) The Wall Mounted Meter Boxes shall incorporate an integral single non-return valve.

f) The Wall Mounted Meter Boxes shall incorporate a clockwise closing isolation valve.

g) The Wall Mounted Meter Boxes shall be installed in accordance with the manufacturer's recommendations.

h) The supply pipe shall be installed by the Developer as either 20mm 25mm or 32mm MDPE (or as identified on the Application for a Water Supply) laid continuously from the Wall Mounted Meter Boxes to the Distribution main within a 50mm continuous rigid blue duct together with a full length continuous heavy duty copper tracing wire terminated internally within the Wall Mounted Meter Boxes.

The supply pipe shall be joint-free between the Distribution main and the Wall Mounted Meter Boxes and free to move within the 50mm blue duct.

i) Upon adoption of the water main Portsmouth Water will maintain the meter and stopcock unit.

j) The occupier shall own the Wall Mounted Meter Boxes enclosure and be responsible for maintaining the box and reasonable access to the unit.

k) The Developer shall provide the occupier with operating keys and manufacturer's information.

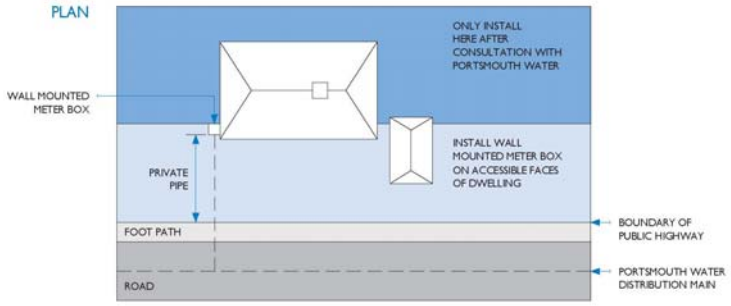

Where Wall Mounted Meter Boxes can not be installed Boundary boxes may be fitted subject to approval from Portsmouth Water. The boundary boxes shall be Waterfit MK III with 600mm tube, ¾" FI, blue Kemetal cap, ¼ turn ballvalve with stops complete with frost protection.

The lid shall be 150 x 150 x 100mm deep ductile iron Grade B, badged 'Water' or 'W'.

10.3.12 Valves

10.3.12.1 Valves shall be of the wedge gate type, and shall comply with the provisions of BS 5163:1968.

10.3.12.2 Valve parts to be in contact with potable water shall meet the relevant provisions as set out below:

Type	BS/WIS
Metallic	BS 7766
Non-metallic	BS 6920, IGN 9-01-02

10.3.12.3 The surfaces of all valves shall be protected from corrosion either by the nature of their material of construction or shall be coated in accordance with WIS 4-52-01 – Class A internally and Class B externally. However, for valves above 300mm diameter, a liquid applied, two pack epoxy system is an acceptable alternative.

10.3.12.4 The Contractor shall submit full details of valves with manufacturer's drawings to Portsmouth Water and obtain his approval before manufacture is commenced. All valves shall be individually tested by the manufacturer for both strength and leakage.

a) Valves shall be Type B.

b) The pressure rating shall be PN16.

c) For potable water applications, gates shall be resilient faced up to 300mm diameter and metal seated above 300mm diameter. Gates shall be cast iron to BS EN 1561 EN-GJL-250 min. or ductile iron to BS EN 1563 EN-GJS-450-10 min.

   For resilient faced gate valves, the gate shall be entirely encapsulated with rubber to BS 2494 Type W, nitrile/EPDM, with a minimum 3mm of rubber in the seating area.

d) The body and bonnet shall be cast iron to BS EN 1561 EN-GJL-250 min or ductile iron to BS EN 1563 EN-GJS-450-10 min.

e) Valve stems shall be threaded sufficiently to allow the gate to be raised clear of the nominal bore of the valve. Stem sealing shall be double toroidal (O-ring) sealing rings to BS 2494 Type W.

   Means shall be provided for resealing the stem under working conditions.

f) Valves shall be designed to pass potable water.

g) Valve caps shall be of ductile iron secured by hexagon headed bolt or cap screw passing vertically through the cap into the end of the spindle.

h) Unless stated otherwise in the Contract bypasses or gearboxes are not required.

i) Unless indicated otherwise, direction of closure shall be clockwise. The direction of closing shall be indicated by an arrow cast on the upper face of the gland or stem seal housing.

10.3.13 Service Size Water Fittings and Appliances

10.3.13.1 Water fittings and appliances shall comply with the relevant provisions of the appropriate specification, as set out in the following table:

Water fitting/appliance	Type/Material	BS/WIS
Service pipes and fittings	Copper	BS EN 1057
	Capillary and compression fittings for copper tubes	BS 864: Part 2
	Polyethylene	BS 6572
	Copper and copper alloy compression fittings for polyethylene pipes	WIS 4-32-11, BS 864: Part 5
	Joints and fittings for PE pipes (performance requirement)	BS 5114
Stop valves	Above ground, screw down pattern	BS 1010: Part 2
	Underground	BS 5433, WIS 4-23-04
Ferrules	Various	WIS 4-22-02

10.3.13.2 Service connections to PE mains shall be via mechanical gunmetal straps. Electrofusion saddles shall not be used.

10.3.13.3 All fittings used for service pipe shall comply with The Water Regulations 1998.

10.4. EXCAVATION

10.4.1 Excavation in Pipe Trenches

The Contractor shall excavate the pipe trenches in accordance with lines and levels agreed with Portsmouth Water's Representative. The width of trenches shall be such that the pipe surround can be thoroughly compacted round the pipes. Where pipes are jointed in the trench, joint holes shall be formed in the bottom and sides of the trench so that joints may be easily and properly made and examined.

All top soil removed and all road metal and hardcore removed shall be kept separate from other excavated material.

Particular care shall be taken when excavation takes place adjacent to a building. Precautions must be taken to ensure that the works do not affect the stability of the building. The Contractor shall be responsible for any structural or material damage which occurs as a result of his works. Highway surfaces shall be initially cut 50 mm with a road saw before breaking out.

10.4.2 Trench Bottom

The bottom of trenches shall be hand trimmed so that pipes, when laid, shall have a bearing upon the solid and undisturbed ground throughout their length except at necessary joint holes. Trenches shall be kept free from water by means of proper pumps until they have been filled in to above the standing level of such water.

10.4. 3 Depth of Pipe

Pipes shall have a minimum cover of 900 mm except in special circumstances when authorised by Portsmouth Water. Greater depths may be necessary to avoid obstacles or to maintain gradients shown in drawings.

10.4.4 Underground Plant

The SLO shall be responsible for obtaining all relevant information of other Utilities apparatus and buried plant. Such information is for guidance only and the Contractor shall ascertain the exact positions of underground plant likely to affect his work by putting down trial holes ahead of pipelaying.

10.5. REFILLING CLAUSES

10.5.1 General

The Backfilling and Reinstatement of all trenches is to be carried out in accordance with the current HAUC 'Specification for the Reinstatement of Openings and Highways'.

10.5.2 Materials for Backfilling

The following material shall not be used for refilling trenches.

(a) Class E Materials

10.5.3 Surround for Ductile Iron Pipes

The Contractor shall fill the trench around the mains and to depth of 150 mm over the mains, with fine material selected from the excavated material. If the excavated material is unsuitable for this purpose then Portsmouth Water may direct that imported granular material is used.

Surround for pipes is to be well consolidated by hand, particularly at the sides of the pipes.

10.5.4 Surround for Polyethylene Pipes

The Contractor shall import and place sand surround to polyethylene pipes, 50mm bed and 150mm surround. Excavated material shall not be used as surround.

10.5.5 Backfill in Fields and Verges

The trench above the pipe surround shall be filled with suitable excavated sub-soil to within 150 mm of the original surface, in layers of no greater than 225 mm, each layer being mechanically consolidated so that the ground is thoroughly compacted. The thickness of each layer will be dependent upon the backfill material and the type of compaction plant used.

10.5.6 Backfill in Tracks and Unmade Footpaths

The trench above the pipe surround shall be filled with suitable excavated materials to the surface. The backfill shall be carried out in layers no greater than 225 mm, each layer being mechanically consolidated so that the ground is thoroughly compacted. The thickness of each layer will be dependent upon the backfill material and the type of compaction plant used.

10.5.7 Backfill in Made-up Footpaths

To be in accordance with the Specification for the Reinstatement of Openings in Highways, published by HMSO June 1992 ISBN 011 551143 1.

10.5.8 Backfill in Roads

To be in accordance with the Specification for the Reinstatement of Openings in Highways, published by HMSO.

The roads in the area are all Type 1, Type 2, Type 3 or Type 4 Flexible, Composite and Rigid type roads.

The road typing is not an indication of road construction but of reinstatement requirements.

The type of road and backfill shall be determined on initial excavation. The road shall be backfilled using suitable excavated material to the following depths below surface level.

		BACKFILL CLASS			
	ROAD TYPE	**CLASS A**	**CLASS B**	**CLASS C**	**CLASS D**
Type 1	Flexible Method D	450	500	550	600
	Composite Method D	500	550	600	650
	Rigid Method B	500	500	500	500
Type 2	Flexible Method D	400	450	500	550
	Composite	450	500	550	600
	Rigid	500	500	500	500
Type 3	Flexible Method C	570	620	670	720
	Composite	400	400	450	500
	Rigid	400	400	450	500
Type 4	Flexible Method C	430	480	530	580
	Composite	400	400	450	500
	Rigid	400	400	450	500

Sub-base material shall then be placed to the following depths below surface level:

Type 1	Flexible	300
	Composite	350
	Rigid	300
Type 2	Flexible	250
	Composite	300
	Rigid	250
Type 3	Flexible	420
	Composite	300
	Rigid	250
Type 4	Flexible	280
	Composite	250
	Rigid	200

Sub-base material shall be GSB 1 or Class A Graded Granular if available from the excavation/original road material.

A road base of Granular sub-base Type 1 shall then be placed to 50mm below the road surface a temporary surface of deferred set material (DSM) is added; 50mm in Highway, 30mm in footpaths.

Trenches in verges which are within 600mm of unsupported carriage way edges shall be backfilled as specified for roads, but substituting top soil for DSM material.

An item has been included for this situation.

10.6. TEMPORARY REINSTATEMENT

10.6.1 Temporary Reinstatement of Fields and Verges

Areas stripped of topsoil shall be refilled using the original soil which shall be stacked separately from the sub-soil. The surface shall be graded and restored to its original condition. The Contractor shall be responsible for restoring any areas affected by settlement during the maintenance period.

10.6.2 Temporary Reinstatement of Tracks and Unmade Footpaths

Where the trench lies in a track or unmade footpath the surface shall be reinstated by placing and rolling 75 mm of DOE Type II material such as scalpings, over all areas disturbed.

10.6.3 Temporary Reinstatement of Made-Up Footpaths

Footpath surfaces shall be reinstated to an interim standard using a 40 mm thickness of 10 mm coated macadam suitable for hand lay.

Where paved slabs are temporarily replaced they shall be bedded on a 20:1 sand cement mix 50 mm thick. Slabs and paviors shall be carefully marked and stored for replacement at the original address.

10.6.4 Temporary Reinstatement of Roads

Road surfaces shall be reinstated to an interim standard by using 10 mm coated macadam suitable for hand lay. The depth of macadam will be 50 mm minimum.

10.6.5 Marker Posts & Plates

The Contractor shall install concrete marker posts by letting the posts into the ground to 450 mm and surrounding with concrete as indicated in the drawings.

Plates shall be made up by the Contractor using adhesive numerals with transparent backing, in accordance with Portsmouth Water specification. The upper set of numbers shall indicate the nominal diameter of main in mm and the lower set the distance, to the nearest metre, of the surface box from the post.

10.6.6 Maintenance of Reinstatement

The Contractor shall maintain areas he has reinstated for the full maintenance period specified by the Highway Authority which may be longer than the self lay defect liability period. Subsidence of SLO trenches during the full maintenance period shall be made good by the SLO or by Portsmouth Water who shall recover all reasonable costs from the SLO.

Any work necessary to maintain reinstatement during the maintenance period shall be at the Contractor's expense. This will include, if necessary, the replacement of permanent reinstatement carried out and rendered defective by way of settlement or failure of the backfill below.

The Contractor shall also be liable for any costs in respect of Defect Inspections.

10.7. PIPELAYING & JOINTING

10.7.1 Pipelaying Generally

10.7.1.1 The works shall be completed in accordance with the approved drawings and specification and manufacturer's instructions.

10.7.1.2 Pipeline marker tape shall be laid between 100mm and 300mm above the pipe. Where a tracer system is specified it shall be continuous and adequately secured to valves and fittings.

10.7.1.3 A detectable marker tape shall be laid 300mm above polyethylene pipes.

10.7.1.4 Only approved manufacturer's lubricants should be used when jointing spigot/socket pipes. Utmost care should be exercised by pipelayers in ensuring that no contaminated cleaning rags are used when wiping out collars or handling rubber rings.

10.7.1.5 No polyethylene pipe shall be installed with scores or cuts penetrating more than 10% of the wall section. If after installation scores or cuts penetrating more than 10% of the wall section are found, the affected lengths of pipe shall be removed.

10.7.1.6' Squeeze-offs' in polyethylene pipes will only be permitted provided the following conditions are met:

- limited to pipe up to and including 63mm OD
- only purpose made equipment shall be used with the stops correctly set for the pipe diameter and wall thickness to avoid over-compression of the pipe
- not to be used within five pipe diameters of a permanent fitting or fusion joint or previous squeeze off
- pipe must be inspected on release of a squeeze-off and any section showing cracking or splitting must be cut out and replaced
- pipe OD must be clearly and indelibly marked where a squeeze off has occurred

10.7.1.7 Where it is necessary to lay with a cover of less than 900mm, the main shall be adequately protected and approved by Portsmouth Water.

10.7.2 Welded Joints in Plastic Pipes

10.7.2.1 Site fusion jointing shall be made in accordance with WIS 4-32-08.

10.7.2.2 A pipe section containing a completed weld shall achieve the same strength characteristics as the parent pipe.

10.7.2.3 All joints shall be made by fully automatic welding equipment with data printout facilities. No welding shall take place unless the data printout facility is operational. The Contractor shall provide data printouts when requested by Portsmouth Water.

10.7.2.4 Copies of all records of equipment servicing and calibration required by WIS No. 4-32-08 shall be delivered to Portsmouth Water prior to each such item of equipment being used on the works and thereafter at intervals of not exceeding six months.

10.7.2.5 Butt fusion welded joints in PE pipes shall be made only between pipes having the same physical characteristics. Joints between pipes from different manufacturers shall only be made with the specific approval of Portsmouth Water.

10.7.2.6 Butt fusion jointing shall be used, except where electrofusion jointing is expressly required. Two dummy joints shall be made for all pipe sizes under all the circumstances listed in WIS No. 4-32-08, clause 2.2.3. It is not necessary to complete the welding of a dummy joint; the procedure may be discontinued after the full heat soak period.

10.7.2.7 If required by Portsmouth Water, the Contractor shall remove external beads from butt fusion joints using an approved debeading tool.

All external beads removed from butt fusion joints and the joint from which it was removed shall be indelibly marked with the unique joint reference number obtained from the welding equipment data printout facility. These beads shall be delivered to Portsmouth Water, together with the relevant data printouts before the joints are backfilled or otherwise put out of view.

10.7.2.8 Equipment and procedures for electrofusion jointing shall be as WIS No. 4-32-08, clause 3.1. and 3.2 respectively, except that hand scraping of pipes shall not be used and pipe clamps for jointing coil pipe shall be hydraulically operated. Wipes shall be specifically manufactured for use in electrofusion welding of pipes and impregnated with a solution containing a minimum of 70% Isopropanol. Prepared pipe ends shall not be inserted into fittings until all liquid from the wipes has evaporated from the cleaned surfaces.

10.7.2.9 The ovality of straight pipes shall not exceed 2% in diameters up to and including 250mm, and 3.5% in diameters over 250mm. The ovality at any section in a coiled pipe after uncoiling shall not exceed 12%. Coiled pipe shall be re-rounded for electrofusion jointing by use of suitable clamps and/or approved inserts.

10.7.2.10 Portsmouth Water may employ an independent Consultant to audit all aspects of butt fusion and electrofusion jointing procedures and to test specimens of welds executed by the Contractor.

The Contractor shall remove production joints selected by Portsmouth Water from pipelines and shall present the joint, together with the relevant printout from the welding equipment to Portsmouth Water.

The Contractor shall also make non-production joints specifically for testing in the presence of the Portsmouth Water Consultant when expressly required.

The Portsmouth Water Consultant will subject joints to any or all the tests set out in Section 7 of WIS No. 4-32-14 and joints will be deemed to be in accordance with the Contract only if all the criteria relevant to the tests carried out are in accordance with the requirements of WIS No. 4-32-14.

10.7.3 Protection of Joints

All iron outside the pipe wrapping and all mild steel bolts and "Viking Johnson" couplings whether inside or outside the pipe wrapping shall be protected with "Denso" priming paste and impregnated fabric tape in accordance with the manufacturer's instructions.

Spaces between bolts or where voids might arise are to be faired with Denso-Mastic.

10.7.4 Cutting Pipes

Pipes shall be cut by a method which provides a clean square profile without splitting or fracturing the pipe wall. The cut ends of pipes shall be formed where necessary to the tapers and chamfers suitable for the type of joint to be used.

10.7.5 Thrust Blocks

Before any internal pressure is applied to a ductile iron pipeline, concrete to BS 8110 Grade 20 shall be cast behind horizontal bends, branches and cap ends. The concrete shall be tightly packed between the fitting and the trench wall but shall not cover joints. Rough shuttering shall be provided to confine the concrete to the areas required.

Vertical bends shall be supported as directed by Portsmouth Water.

Concrete backing is not required for fused tees or bends in Polyethylene pipelines except at hydrants where the tee or duckfoot bend shall be set in a bed of concrete, and where 'pushfit' fittings have been used.

10.7.6 Sluice Valves, Fire Hydrants and Air Valves

During mainlaying, each sluice valve, fire hydrant and air valve shall be carefully examined, its interior thoroughly cleaned and the spindle checked for gland tightness and ease of movement.

10.7.7 Underground Chambers

The Contractor is to be responsible for the construction of a chamber complete with surface box for each sluice valve, fire hydrant and air valve installed all in accordance with the specification and drawings.

10.7.8 Tolerances for Pipelines

10.7.8.1 The deviations for pipelines shall be permissible only to the extent that they do not result in reverse gradients.

10.7.9 Mainlaying and Service Records

10.7.9.1 The Contractor shall keep a daily record of all pipes and fittings laid in their order of laying, together with their length, depth to invert of pipe at the socket end of each pipe, description of surface and location. Similar records of all water services laid shall be kept.

10.7.9.2 The Contractor shall keep a record of all the services encountered in the pipe trench. This record shall contain a description of the type of service, its size, depth and location along the main. The angle at which the service crossed the trench is also to be recorded.

10.7.9.3 Records shall be submitted by the Contractor on a daily basis.

10.7.9.4 The Contractor shall produce mains records in accordance with the New Roads and Street Works Act 1991 and, where required, the Department of the Environment/National Water Council Standing Technical Committee Report No. 25 (NWC Report No. 25).

10.7.9.5 Final 'as laid' records shall be submitted within 10 working days of each pipe being laid.

10.8. TESTING AND DISINFECTION

10.8.1 Operation and Precautions Prior to Testing Pipelines

10.8.1.1 Operation of sluice valves and hydrants on existing mains required in order to complete swabbing, testing and disinfection shall be undertaken by Portsmouth Water. The Contractor shall give a minimum of 48 hours notice to Portsmouth Water of the requirement for a water supply or valve operation.

10.8.1.2 It will not be permissible to transmit the thrust onto a completed length of piping or onto existing mains from which the pipeline is being filled.

10.8.1.3 Before the pressure testing of the pipeline is carried out, the trench shall be sufficiently refilled to ensure that the requisite anchorage is provided for each pipe as will prevent movement during the testing period.

10.8.2 Testing Method Programme and Notification

10.8.2.1 At least seven days before any testing of the main, the Contractor shall submit to Portsmouth Water in writing his proposed programme of testing and swabbing.

10.8.3 Testing of Pressure Pipelines (excluding Thermoplastic Pressure Pipes)

10.8.3.1 During testing, the Contractor shall provide for transmitting any unsupported end or side thrusts to the solid ground at the ends of the pipeline, or into the sides of the trenches, preferably by hydraulic or screw jacks supported on suitable framework. It will not be permissible to transmit the thrust on to a completed length of piping or onto existing mains from which the pipeline is being filled.

10.8.3.2 The Contractor shall provide all necessary apparatus and fittings for carrying out the hydraulic tests. When directed by Portsmouth Water the Contractor shall submit any component of his test equipment to the client for inspection.

10.8.3.3 <u>Test Pressure</u>

Test pressures shall be calculated from the Maximum Design Operating Pressure (MDP) as follows:

a) for systems where surge not calculated, derive MDPa by adding fixed allowance for surge of 2 bar (20 metres) to maximum operating pressure under steady flow conditions.

   Test pressure shall be the lesser of
   - MDPa x 1.5
   - MDPa + 5.0 bar (50 metres)

b) for systems where surge calculated, derive MDPc, maximum operating pressure including surge.

   Test pressure shall be
   - MDPc + 1.0 bar (10 metres)

   Test pressures applied to Ductile Iron mains with service connections already fitted should be restricted to a maximum of 18 bar.

Pipeline Section	Maximum Design Head Metres AOD	Test Pressure/Head Metres AOD
A	To be completed by compiler	To be completed by compiler
B	ditto	ditto
C	ditto	ditto
Etc.	ditto	ditto

10.8.4 Testing of Thermoplastic Pressure Pipelines

10.8.4.1 Polyethylene pipelines shall be tested in sections of length no greater than 1000 metres. The selection of lengths for testing shall take due account of changes in elevation to enable each section to be tested at as high a pressure as practicable.

The standing period for stabilisation of the pipe shall be a minimum of 2-3 hours. Testing the day after filling is preferred.

The pressure in the pipeline shall then be raised steadily until the test pressure is reached in the lowest part of the section. The test procedure then to be followed shall generally be as in 10.8.4.2.

10.8.4.2 For MDPE 80 SDR11 the test pressure at the lowest point of each section shall be 1.5 x the rated pressure of 12.5 bar, i.e. 18 bar.

Service connections onto polyethylene mains shall be tested to 18 bar for two minutes, applied to the ferrule tee in order to test the saddle and service pipe up to the Wall Mounted Meter Box. This shall be done prior to cutting the ferrule into the main.

Care must be taken to ensure that test pressures shall not be applied to existing service pipes.

10.8.5 Swabbing and Pressure Testing of Water Mains

10.8.5.1 Recovery of swabs and pressure testing shall be witnessed by Portsmouth Water.

10.8.5.2 The Contractor shall supply swabs of nominal diameter 50mm greater than that of the pipeline. Two swabs, one coarse (hard) and one fine (soft) textured shall be passed simultaneously through each section of main to be swabbed. All necessary temporary pipework for installation and removal of swabs shall be provided by the Contractor.

10.8.5.3 Swabbing and testing shall be carried out in accordance with the following procedures:

Case 1

New Main exceeding two pipe lengths, up to 300 mm (12") diameter, beginning with a rubber faced sluice valve and ending with a fire hydrant

a) Insert foam swab into new main at the sluice valve before connecting to existing main.

b) Make connection to existing main, including disinfection and obtain sample from nearest hydrant on existing main and forward to Portsmouth Water Laboratory for analysis.

c) Insert one ½" ferrule downstream of the sluice valve. If ferrule is more than 30 metres from nearest fire hydrant then install one ½" ferrule upstream of sluice valve also.

d) Flush main and recover swab at end fire hydrant including dismantling, if necessary. Recovery of swabs to be witnessed by Portsmouth Water.

e) Charge main with water, eliminating all air before shutting in.

f) Check that main remains at mains pressure by fitting pressure gauge to end fire hydrant. Test to be witnessed by Portsmouth Water.

g) If main withstands mains pressure it is ready for the pressure test and chlorination.

A section of ½" pipe, terminating with a gate valve, is to be connected to the test ferrules and left in the sluice valve chamber or, if necessary, a temporary fire hydrant chamber. The ferrule hole excavations are to be backfilled.

h) When the main is fit for service the two ferrules are to be removed. In the case of PVC and PE mains, blank saddles shall be fitted and in the case of iron mains, plugs are to be inserted in the mains. If an iron main is laid within a polythene sleeve, the sleeve is to be made good after the removal of the ferrule by the application of a patch of polythene sealed with black PVC tape.

Case 2

New Main exceeding two pipe lengths commencing with a metal faced sluice valve and ending with a fire hydrant

a) Cap the commencing end of the main and insert one ¾" ferrule as close as possible to the cap.

If ferrule is more than 30 metres from nearest fire hydrant then install one ¾" ferrule on existing main within 30 metres of chlorination ferrule.

b) Fill main through this ferrule eliminating all air before shutting in.

c) Check that main remains at mains pressure by fitting pressure gauge to end fire hydrant. Test to be witnessed by Portsmouth Water.

d) After satisfactory pressure test, remove end cap, insert foam swab into new main and make connection to existing main by the use of a metal faced sluice valve.

e) Flush main and recover swab from end fire hydrant including dismantling if necessary. Recovery of swabs to be witnessed by Portsmouth Water.

f) Charge main with water eliminating all air before shutting in.

g) If connection appears watertight, Portsmouth Water to inspect and approve that the main is now ready for chlorination.

h) When the main is fit for service, remove the ferrule. In the case of PVC and PE mains, blank saddles shall be fitted and in the case of iron mains, plugs are to be inserted in the mains.

i) If an iron main is laid within a polythene sleeve, the sleeve is to be made good after the removal of the ferrule as for Case 1 h).

10.8.6 Disinfection Sampling and Operation of Water Mains

10.8.6.1 After satisfactory completion of testing and swabbing, pipelines intended for potable water duty shall be disinfected with a solution of Sodium Hypochlorite introduced to the pipeline using the bridging pipework specified.

10.8.6.2 Water from existing water mains shall be passed through the bridging pipework by reference to the meter, at a predetermined constant rate into the main to be disinfected. The hypochlorite solution shall be injected at a measured rate sufficient to produce a

uniform free chlorine concentration of 20 mg/l, until the pipeline is fully charged with chlorinated water. Immediately upon charging the main, the residual chlorine level shall be checked on site.

10.8.6.3 The Contractor shall supply and use approved high range (0-50 mg/l) chlorine test equipment (equipment equivalent to Palin Test PT 220 comparator kit with CM 162/50 starter pack and CD 162/50 colour discs – Tel. 0191 491 0808) to check free chlorine concentrations at the limits of the pipeline and at any sample points. Sample points shall be spray disinfected immediately prior to use.

10.8.6.4 Once the pipeline has been successfully filled with the required strength of hypochlorite solution, it shall be isolated and allowed to stand for at least 24 hours at 20 mg/l.

10.8.6.5 After the standing period, the chlorinated water shall be flushed to waste by introducing further water to the pipeline through the bridging pipework. The Contractor shall ensure that the water in the main is 'turned over' at least once.

The Contractor shall assess the concentration of free chlorine level before test water is discharged. The Contractor shall use an approved sodium thiosulphate dosing system to dechlorinate all discharge water. The dosing rate shall be monitored at regular intervals ('timed samples' equivalent to the volume of the pipe between sample points) to ensure that the discharge water is dosed at the correct rate.

10.8.6.6 On commencement of flushing, samples shall be taken from the incoming supply. If flushing takes longer than 24 hours, a further sample shall be taken from the incoming supply at 24 hour intervals.

The free chlorine levels shall be assessed for each sample and the highest readings used for comparison with the discharge water.

Flushing shall continue until the chlorine concentration of water being discharged at all points along the length of the pipeline is no higher than the water supplied from the existing main. Furthermore, following cement mortar relining, flushing shall continue until the pH level has been reduced to below the PCV limit of 9.5 (PCV = Prescribed Concentration Value).

10.8.6.7 After completion of flushing, mains ends and all associated fittings shall be securely covered and the main allowed to stand full of water for a further period of at least 16 hours, but not in excess of 24 hours before testing. At the end of this period, samples of water shall be taken from the main at the designated sample points as agreed with Portsmouth Water's Water Quality Department. These will be tested to establish the bacteriological, chemical and physical qualities of the water in the section of main under test.

Portsmouth Water will be responsible for the collection of all samples.

The timing of frequency of taking of samples shall be agreed with Portsmouth Water. All samples shall be submitted on the day taken with a minimum of delay and be accompanied with 'New Mains Commissioning Report' form.

10.8.6.8 If any of the samples tested exceed the values for the parameters set out below, the section of main under test will be deemed to be unsatisfactory.

Test	Criteria of Failure	Action
Chemical		
Free Chlorine	Greater than 0.1 mg/l over incoming supply	Flush and resample
Turbidity	Greater than 2 NTU over incoming supply or >3 NTU anyway	Flush and resample
Conductivity	Figure significantly above incoming supply (using local interpretation)	Flush and resample

Bacteriological		
Coliforms	Presence of presumptive coliforms or E Coli	Flush and resample
Non Coliforms	Presence of non-coliform colonies indicates significant deterioration from incoming supply (using local interpretation) Repeat failure of either of above 2 requires rechlorination and 3 clear samples on 3 consecutive days.	Flush and resample
37º/44 ±4 hrs Plate Count	Plate counts indicate significant deterioration from incoming supply (using local interpretation) Repeat failure of above requires rechlorination and one clear sample.	Flush and resample
Physical		
Subjective Odour	Unusual odour in sample	Liaise with Water Quality Department. Flush and resample
Appearance	Colour and solids significantly different to incoming supply.	Flush and resample

In the event of the test being unsatisfactory, swabbing, disinfecting and flushing procedures shall be repeated as necessary at the Contractor's expense until such time as a satisfactory result is obtained from each sample point.

The Contractor shall allow five working days for the samples to be tested and for the production of the results.

It should be noted by the Contractor that the method of odour testing used by the Client's scientific staff will generally follow those required of the pipe and fittings manufacturer.

10.8.6.9 The charges for bacteriological analysis will be borne by Portsmouth Water for the first series of samples taken from a length of water main to be commissioned. The cost of subsequent samples will be charged to the Contractor.

10.8.6.10 After the bacteriological results have been confirmed satisfactory, the main shall be made fully operational by Portsmouth Water.

The period between satisfactory bacteriological results being obtained and the making of the main operational should be as short as possible. In the event of this period exceeding 14 days, the main should be flushed to waste, ensuring that the water in the main is 'turned over' at least once, allowed to stand for a minimum of sixteen hours and then resampled.

All pipes and fittings used at connections to existing pipelines shall be brushed clean and liberally sprayed internally with a hypochlorite solution with a free chlorine residual of 1000 mg/l (ppm). The assembly shall then be fitted into the main. The Contractor shall be aware of his liability in respect of discharges to watercourses.

10.8.7 Water for Testing, Swabbing and Disinfection

10.8.7.1 Water for testing, swabbing and disinfection of potable water mains shall be taken from the existing supply. The Contractor shall make arrangements with Portsmouth Water for appropriate supply facilities.

10.8.7.2 Water will be provided from existing mains at the points indicated on the Contract Drawings.

10.8.7.3 Water for testing, swabbing, flushing and disinfection of pressure or non-pressure pipelines will be provided by Portsmouth Water and the Contractor will be charged at the bulk supply rate for metered supplies, prevailing at the time. Pipework for transferring water from the point of supply shall be provided and installed by the Contractor. For supplies from a potable water main, bridging pipework, to the approval of Portsmouth Water, shall be incorporated in transfer pipework between the point of supply and the pipe under test. Other arrangements for supplies from non-potable water mains or other services shall be to the approval of Portsmouth Water.

10.8.7.4 The Contractor shall give 48 hours notice to Portsmouth Water of his requirements for a water supply.

10.8.8 Disposal of Water from Cleansing, Testing or Disinfection

10.8.8.1 When discharging flushed water the Contractor shall meet the exact local requirements of the Environment Agency or Sewerage Agency as appropriate, in terms of quantity, quality and point(s) of discharge. The Contractor shall avoid discharging chlorinated, or high pH water into surface water drains or watercourses or onto arable or pasture land. Care should be taken when using existing drainage to ensure that the requirements of the receiving watercourse are considered. If discharge is via a foul water sewer, precautions shall be taken to avoid any risk of back-syphonage.

10.8.8.2 The Contractor shall provide all necessary facilities for the removal and disposal of water used for disinfection, swabbing and testing. The means of disposal of the water will comply with all statutory regulations.

10.9. SERVICE PIPES DESIGN AND INSTALLATION

10.9.1 Design

The Company will discuss and agree the position for service pipes and ducts on final construction drawings provided by the Contractor. The final position and location will be jointly agreed on site. The Contractor shall provide record drawings indicating the position of services as constructed.

10.9.2 Materials

The size and material of service pipes will be specified by Portsmouth Water on receipt of final construction drawings and soils report. All service pipes crossing public highways and private communal drives will be ducted in 100mm diameter ducts 750mm below the finished surface levels.

Service pipes will generally be of blue MD polyethylene and single and twin ferrule straps shall be used on PE mains. Appropriately sheaved copper pipe will be used in contaminated ground as directed by Portsmouth Water.

Services shall be laid between .75 metre and 1.2 metres deep and shall be laid in accordance with the specification in Drawing Number 108/1/73 (Appendix A).

Polyethylene service pipe shall only be cut with suitable cutters and not hacksaws.

APPENDIX A - CONTRACT DRAWINGS

A4

STANDARD INSTALLATION

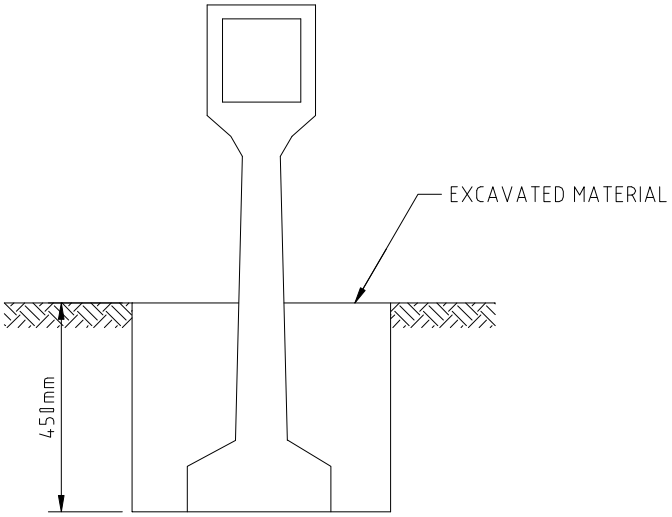

SPECIAL INSTRUCTIONS TYPE

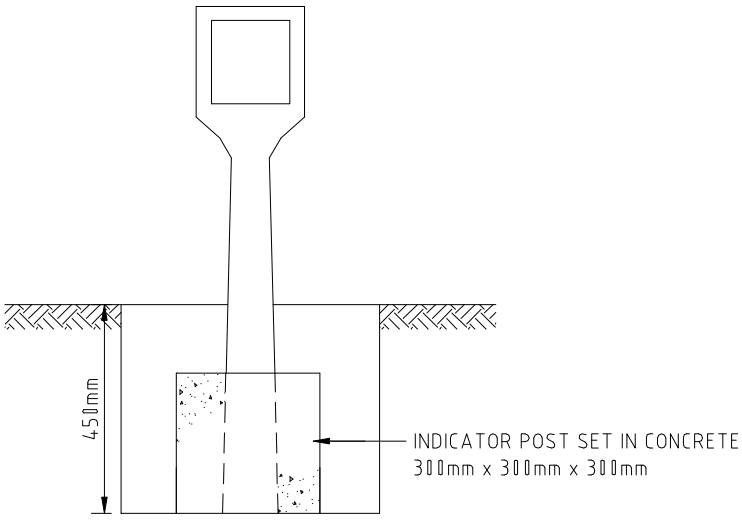

	TITLE APPENDIX 10.9 TYPICAL INDICATOR POST INSTALLATION	Drawing No. 108/1/12	Job No.	Date 23-02-05	Scale NTS
		Drawn By	Traced By DCR	Checked By DBB	

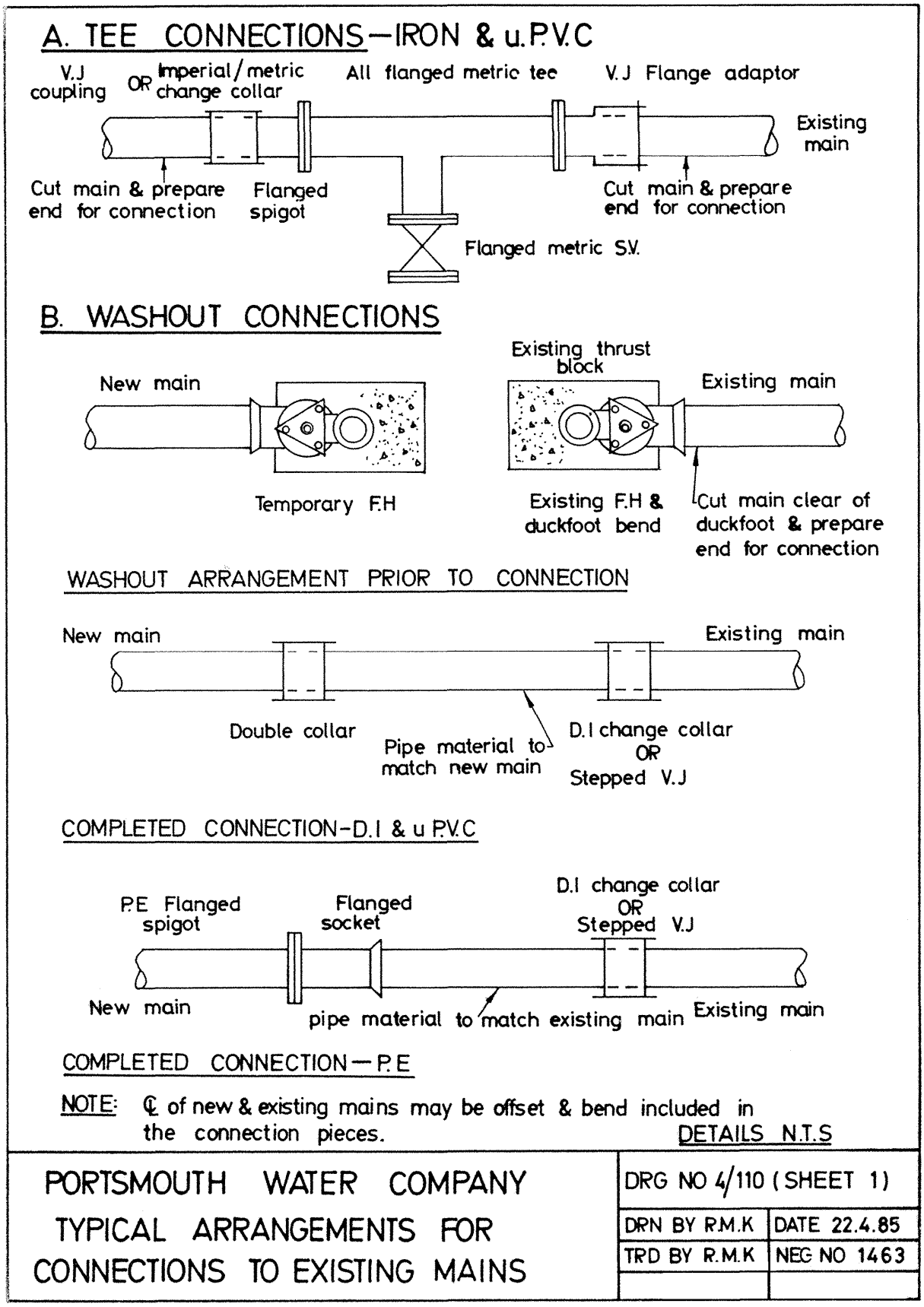
A. TEE CONNECTIONS—IRON & u.P.V.C
V.J coupling
OR
Imperial/metric change collar
All flanged metric tee
V.J Flange adaptor
Existing main
Cut main & prepare end for connection
Flanged spigot
Cut main & prepare end for connection
Flanged metric S.V.
B. WASHOUT CONNECTIONS
New main
Existing thrust block
Existing main
Temporary F.H
Existing F.H & duckfoot bend
Cut main clear of duckfoot & prepare end for connection
WASHOUT ARRANGEMENT PRIOR TO CONNECTION
New main
Existing main
Double collar
Pipe material to match new main
D.I change collar
OR
Stepped V.J
COMPLETED CONNECTION-D.I & u P.V.C
P.E Flanged spigot
Flanged socket
D.I change collar
OR
Stepped V.J
New main
pipe material to match existing main
Existing main
COMPLETED CONNECTION—P.E
NOTE: ℄ of new & existing mains may be offset & bend included in the connection pieces.
DETAILS N.T.S
PORTSMOUTH WATER COMPANY
TYPICAL ARRANGEMENTS FOR CONNECTIONS TO EXISTING MAINS
DRG NO 4/110 (SHEET 1)
DRN BY R.M.K
DATE 22.4.85
TRD BY R.M.K
NEG NO 1463

C. VALVE CONNECTIONS

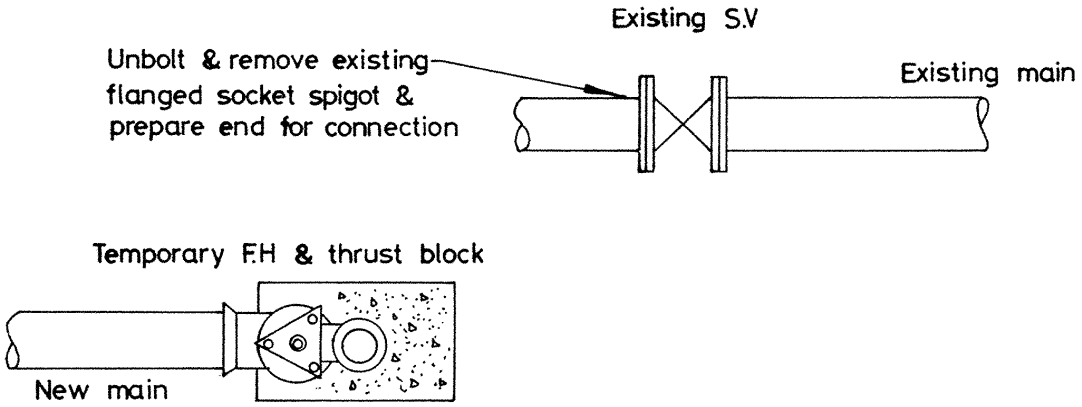

ARRANGEMENT PRIOR TO CONNECTION

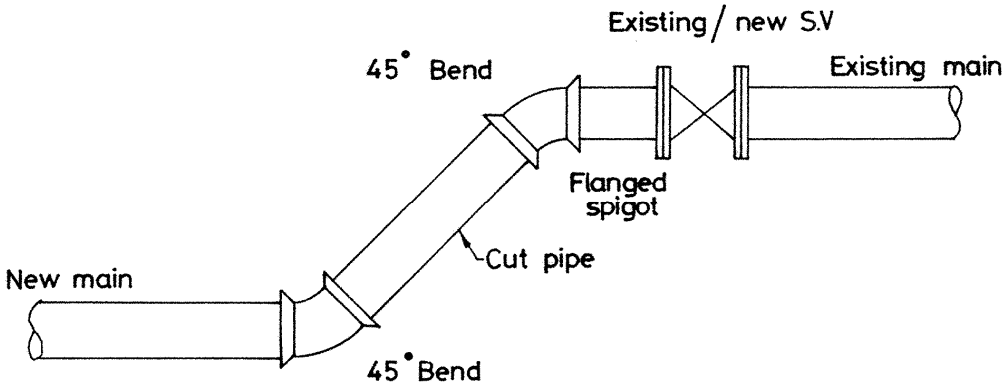

All connection pieces to be in the same material as new main.

COMPLETED CONNECTION

DETAILS N.T.S

PORTSMOUTH WATER COMPANY TYPICAL ARRANGEMENTS FOR CONNECTIONS TO EXISTING MAINS	DRG NO 4/110 (SHEET 2)
	DRN BY R.M.K — DATE 22.4.85
	TRD BY R.M K — NEG NO 1463

A4

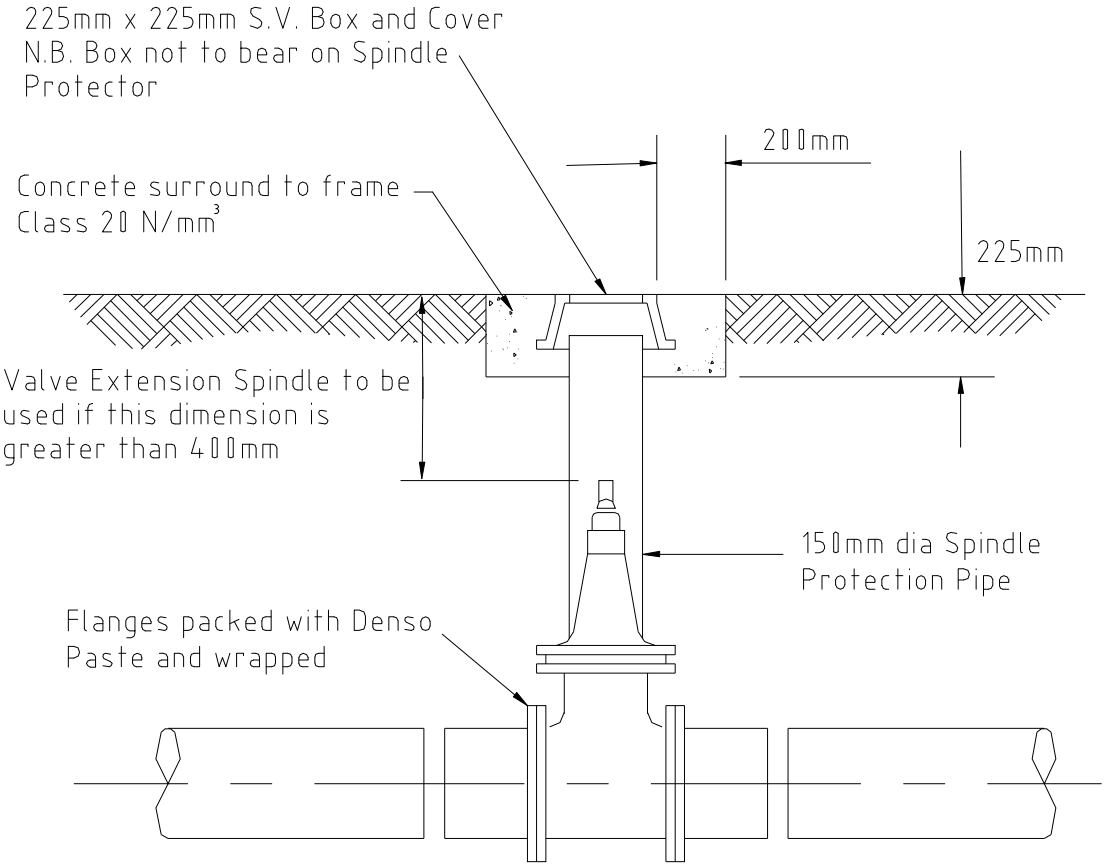

Valve to be backfilled with selected
material and well compacted

TITLE	Drawing No.	Job No.	Date	Scale
TYPICAL SLUICE VALVE INSTALLATION	108/1/66		16-10-00	
	Drawn By	Traced By	Checked By	
		DCR		

A4

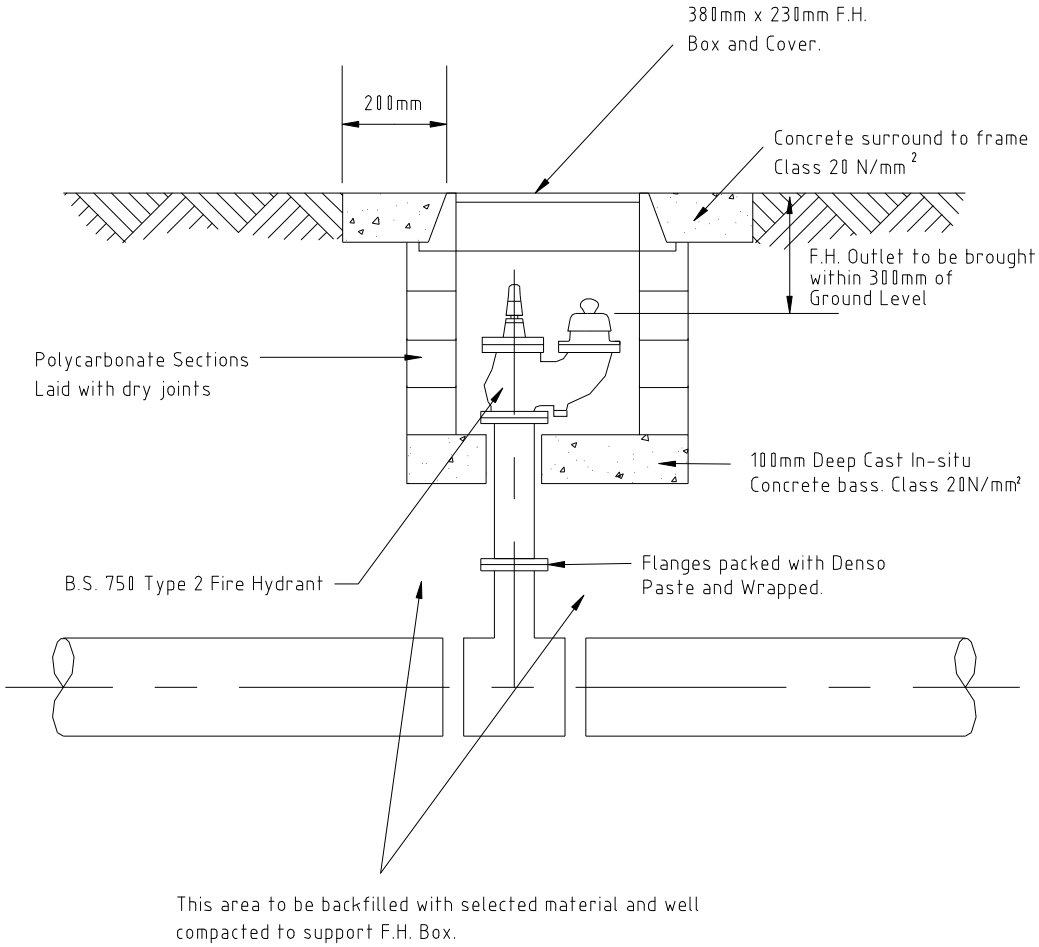

TITLE	Drawing No.	Job No.	Date	Scale
TYPICAL F.H./W.O. INSTALLATION	108/1/67		18-10-00	
	Drawn By	Traced By	Checked By	
		DCR		

A4

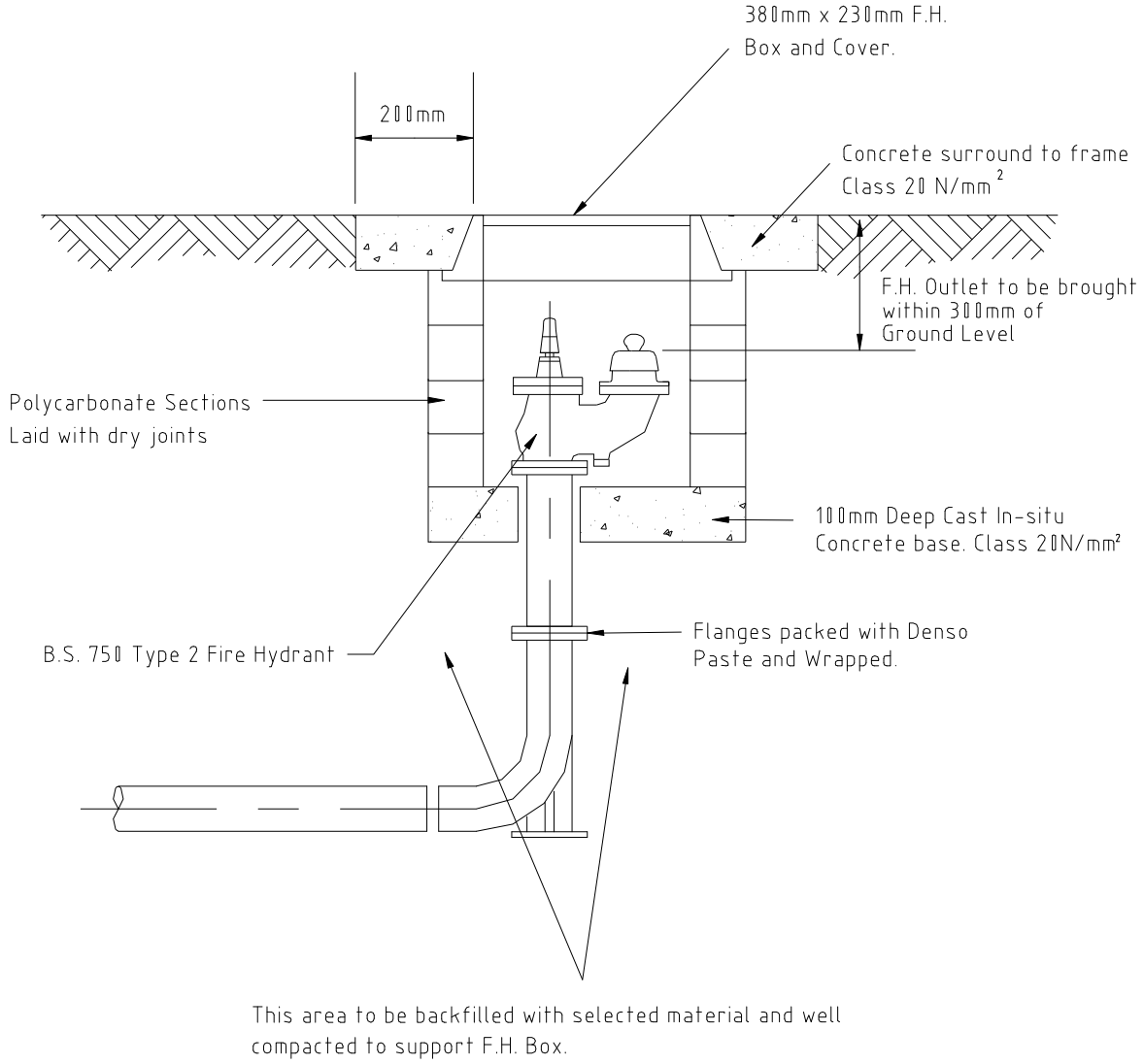

	TITLE TYPICAL END F.H. INSTALLATION	Drawing No. 108/1/68	Job No.	Date 18-10-00	Scale
		Drawn By	Traced By DCR	Checked By	

A4

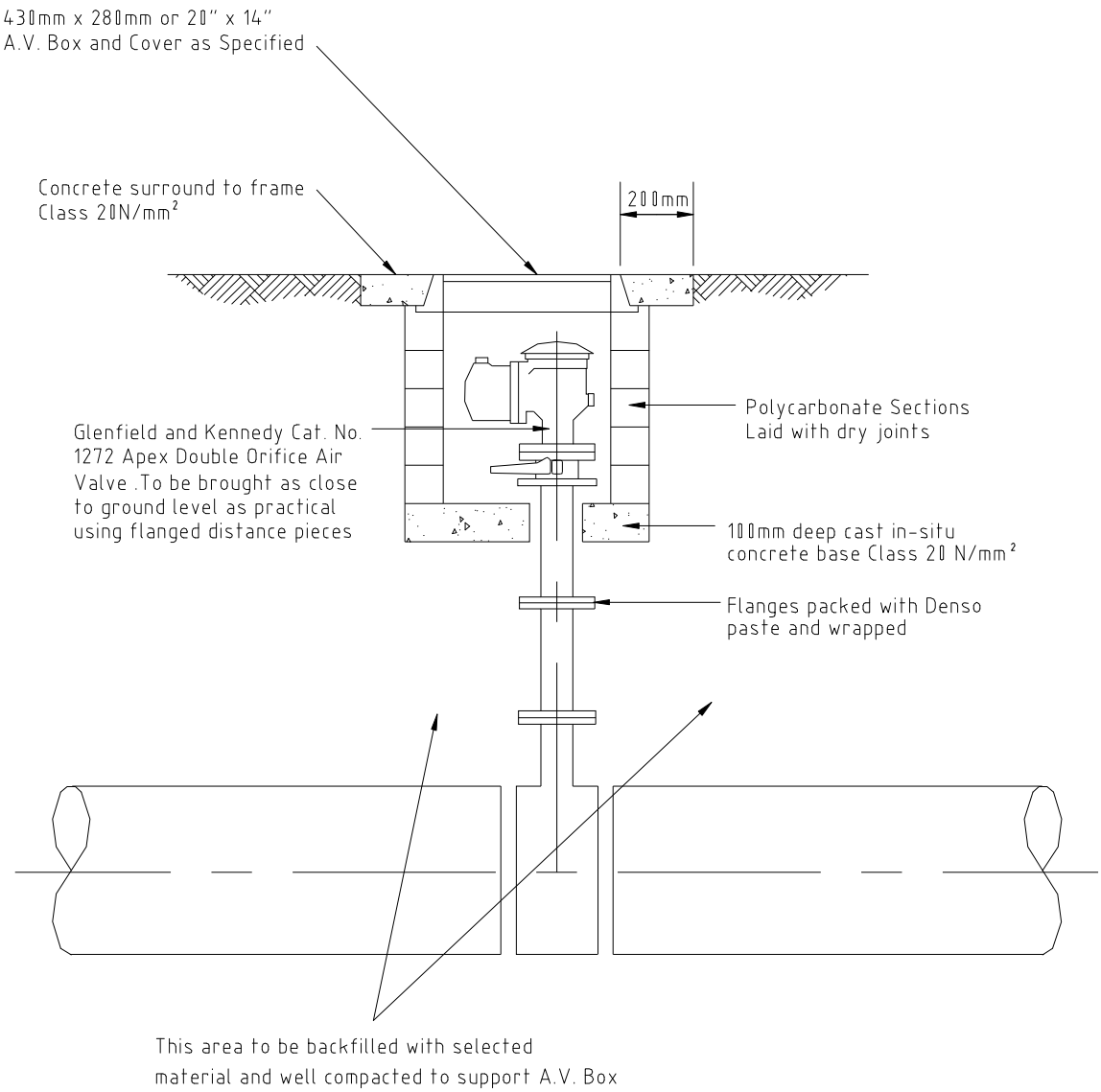

	TITLE TYPICAL AIR VALVE INSTALLATION	Drawing No. 108/1/69	Job No.	Date 18-10-00	Scale
		Drawn By	Traced By DCR	Checked By	

A4

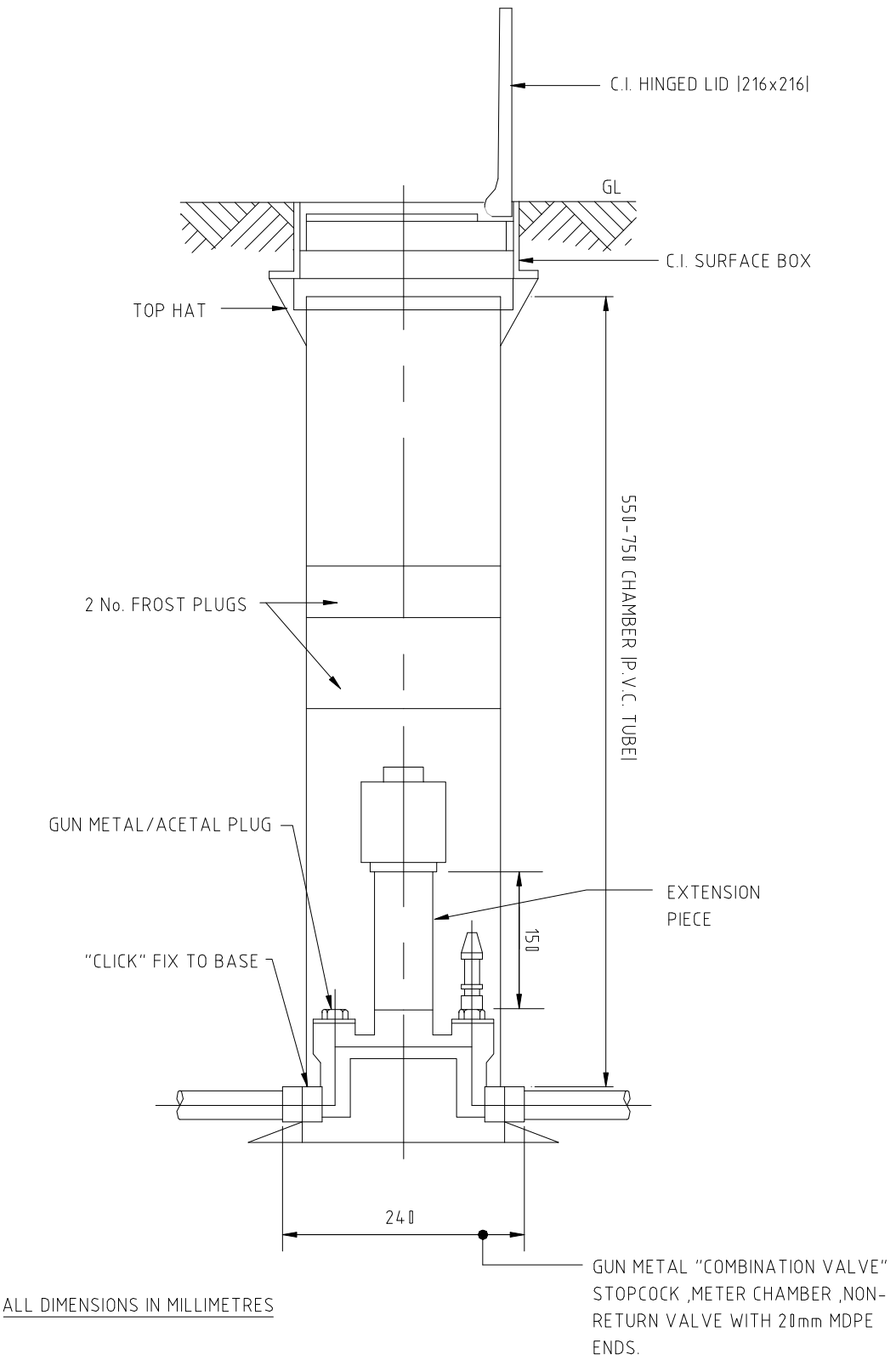

ALL DIMENSIONS IN MILLIMETRES

	TITLE TYPICAL METER, STOPCOCK COMBINATION UNIT ARRANGEMENT	Drawing No. 108/1/70	Job No.	Date 18-10-00	Scale
		Drawn By	Traced By DCR	Checked By	

A4

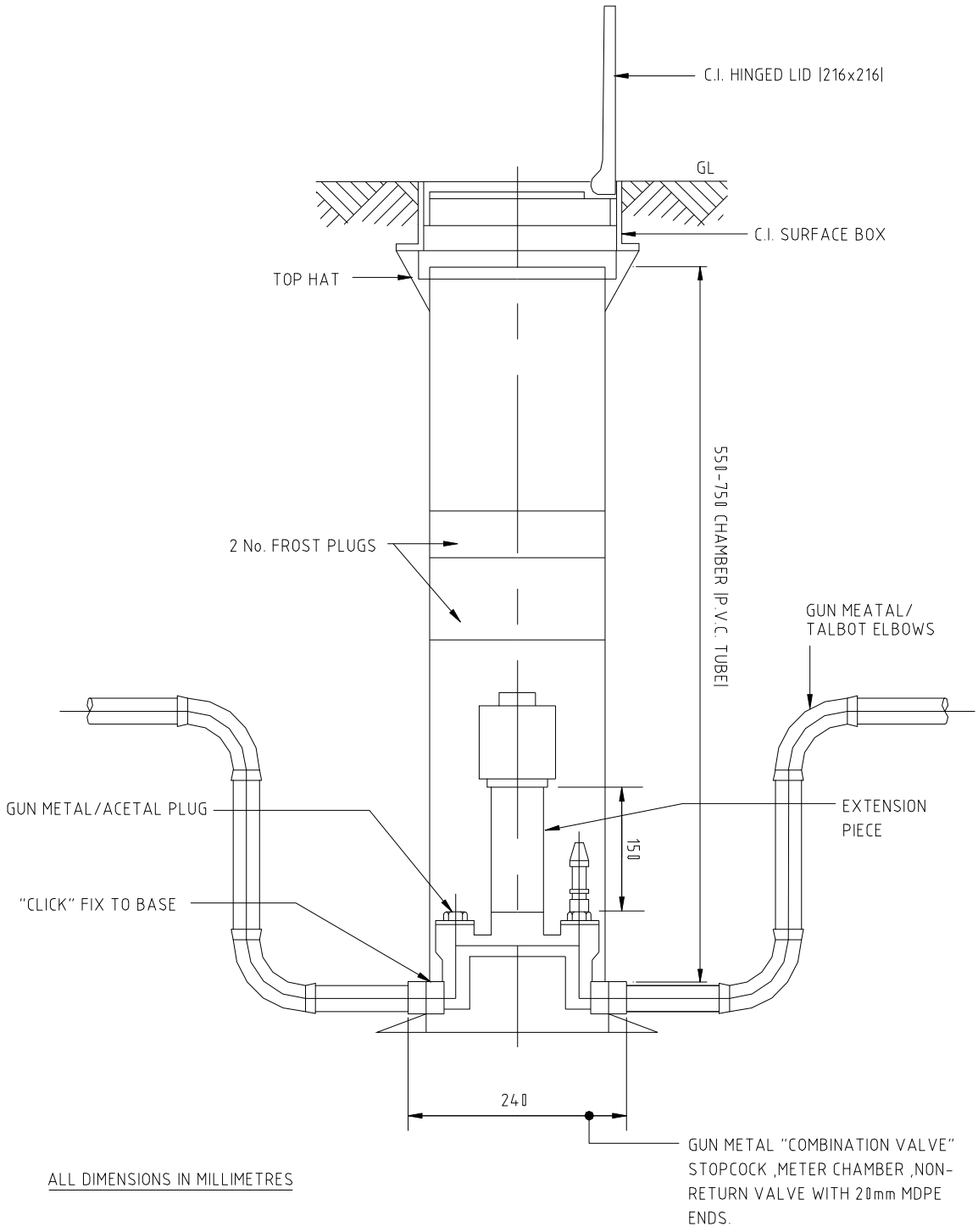

	TITLE TYPICAL METER, STOPCOCK COMBINATION UNIT ARRANGEMENT FOR SHALLOW SERVICES	Drawing No. 108/1/71	Job No.	Date 18-10-00	Scale
		Drawn By	Traced By DCR	Checked By	

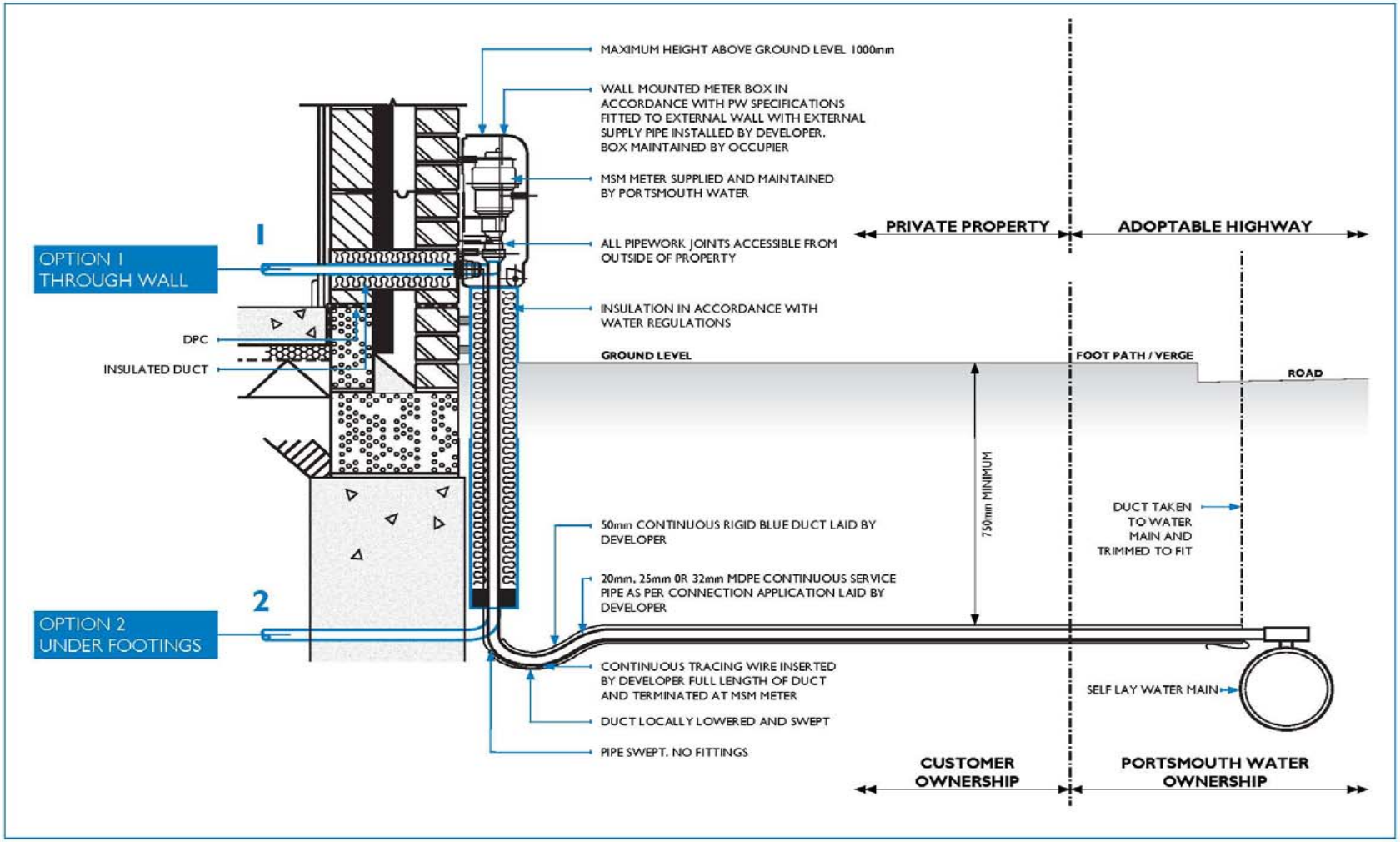

SPECIFICATION FOR WALL MOUNTED METER BOX - SELF LAY

DRAWING NUMBER
108/1/73